YAMAHA

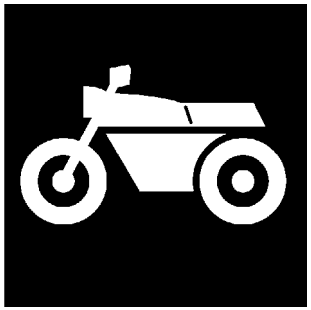

PARTS CATALOGUE

MT01 (5YU8) EUROPE,SOUTH AFRICA
MT01 (5YUB) EUROPE,SOUTH AFRICA

1F5YU-300E1

(2F5YU-300E1)

YAMAHA GENUINE Parts & Accessories

2007-12-27

NEWS NO.	DATE	COMMENT
PE0-MC-060134	Dec.,18,2007	MOD:MT01(5YU8/B) FIG.19 FRAME 2 ILIST/ILLUSTRATION REVISION
PE0-MC-070055	Dec.,6,2007	COR:MT01(5YU8,B) FIG.45 ELECTRICAL 2 LIST CORRECTION
PE0-MC-070081	Dec.,18,2007	COR:MT01/W(5YU8,B/A,C) FIG.45 ELECTRICAL 2 LIST CORRECTION

MT01
PARTS CATALOGUE
©2006 by Yamaha Motor Co., Ltd.
1st edition, October 2006
All rights reserved.
Any reprinting or unauthorized use
without the written permission of
Yamaha Motor Co., Ltd.
is expressly prohibited.

A3

FOREWORD

This Parts Catalogue is related to the parts for the model(s) on the cover page. When you are ordering replacement parts, please refer to this Parts Catalogue and quote both part numbers and part names correctly.

1. Modifications or additions which have been made after the issue of the Parts Catalogue will be announced in the Parts News.
   It is advisable that you make the necessary corrections to the Parts Catalogue according to the Parts News.

2. Abbreviations
   The following abbreviations are used in this Parts Catalogue.

   "UR" Use specified parts number.
   "UN" Use as many as needed.
   "AP" Alternate Parts
   "LM" Locally Made (Parts need to be ordered locally)
   "F#" Frame No. (Applicable machine No.)
   "O/S" Over Size

3. The number of components for assembly
   - Parts, which are to be supplied in an assembly, are listed with a dot (.) in front of the part name as shown below.
   - The numeral appearing to the right of each component part indicates the quantity of parts for each assembly unit.

PART NO.	DESCRIPTION	Q'TY	REMARKS
2F5–83310–60	FRONT FLASHER LIGHT ASSY	2	
115–83311–60	.BULB (6V–18W)	1	

4. Applicable colours of graphics are represented in the "REMARKS" as shown below.

PART NO.	DESCRIPTION	Q'TY	REMARKS
2N4–24110–00–X5	FUEL TANK COMP.	2	MXR
3J1–24240–10	.GRAPHIC, FUEL TANK	1	FOR MXR

5. Note that the illustrations for reference in finding parts numbers are not to be used for assembling. When assembling, please use the applicable service manual.

6. The asterisk (*) before a reference number indicates modified items after the first edition.

7. Applicable Serial No.

Engine Serial No.

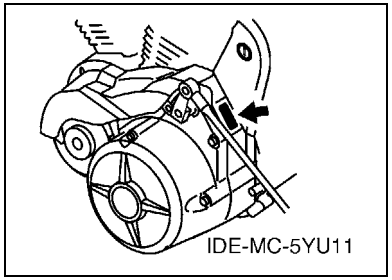

Frame Serial No.

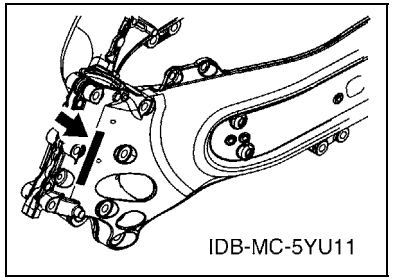

8. Applicable Colour Code (The (*) mark shows Model colour.)

Abbreviation	Colour Name	Colour Code
BWC1(*)	BLUISH WHITE COCKTAIL 1	0390
DRMK(*)	DEEP RED METALLIC K	0918
LGB	LOW GLOSS BLACK	0098
MBL2	MAT BLACK 2	0582
S8	SILVER 8	0895
SMX(*)	BLACK METALLIC X	0903

MODEL LABEL

(1) A label called “Model Label” is affixed in the location as indicated in (3) below.
When using this parts catalogue, please be sure to cross–reference the “model code – production code No.” in the catalogue with the “model code – production code No.” indicated on the Model Label affixed onto the product concerned.

(2) “Model Label” Indication

a b ○ xxxx – xxx ● x c	a: Model Type Code b: Production Code No. c: Colouring Type

○ 4TW1–010 ● A

(3) Model Label Affixing Location

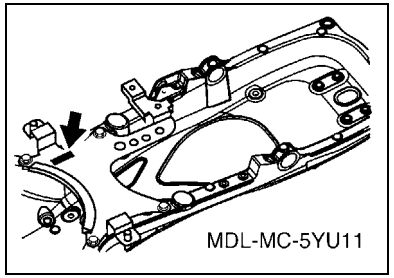

(4) Colouring Information

Model Code	Colouring Type Code	Colour Code	Colour Name	Abbreviation
5YU8	A	0903	BLACK METALLIC X	SMX
	B	0390	BLUISH WHITE COCKTAIL 1	BWC1
5YUB	A	0918	DEEP RED METALLIC K	DRMK

(5) Model Code – Production Code Number of Model Listed in This Parts Catalogue

Model Code	Production Code No.	Country (destination)	Model Code	Production Code No.	Country (destination)
5YU8	010	EUROPE 1			
	020	BELGIUM			
		NETHERLANDS			
	030	SPAIN			
	040	EUROPE 2			
	050	UNITED KINGDOM			
	060	GREECE			
		IRELAND			
		SOUTH AFRICA			
	070	NORWAY			
	080	PORTUGAL			
5YUB	010	EUROPE 1			
	020	BELGIUM			
		NETHERLANDS			
	030	SPAIN			
	040	EUROPE 2			
	050	UNITED KINGDOM			
	060	GREECE			
		IRELAND			
		SOUTH AFRICA			
	070	NORWAY			
	080	PORTUGAL			

CONTENTS

ENGINE

CYLINDER HEAD B2
CYLINDER B4
CRANKSHAFT & PISTON B5
VALVE B6
CAMSHAFT & CHAIN B8
OIL PUMP B10
OIL CLEANER B11
INTAKE B12
INTAKE 2 ..... B14
EXHAUST C2
CRANKCASE C5
CRANKCASE COVER 1 ..... C6
STARTER C9
CLUTCH C11
TRANSMISSION C13
SHIFT CAM & FORK C15
SHIFT SHAFT D2

CHASSIS

FRAME D3
FRAME 2 ..... D6
FENDER D9
SIDE COVER D11
OIL TANK D14
REAR ARM & SUSPENSION E3
STEERING E6
FRONT FORK E8
FUEL TANK E10
SEAT E13
FRONT WHEEL E14
FRONT BRAKE CALIPER E15
REAR WHEEL F2
REAR BRAKE CALIPER F4
STEERING HANDLE & CABLE F5
FRONT MASTER CYLINDER F6
FRONT MASTER CYLINDER 2 ..... F7
STAND & FOOTREST F8
STAND & FOOTREST 2 ..... F10
REAR MASTER CYLINDER F12
GENERATOR F14
FLASHER LIGHT F15
METER G2
HEADLIGHT G3
TAILLIGHT G5
HANDLE SWITCH & LEVER G6
ELECTRICAL 1 ..... G7
ELECTRICAL 2 ..... G8

INDEX

NUMERICAL INDEX M1

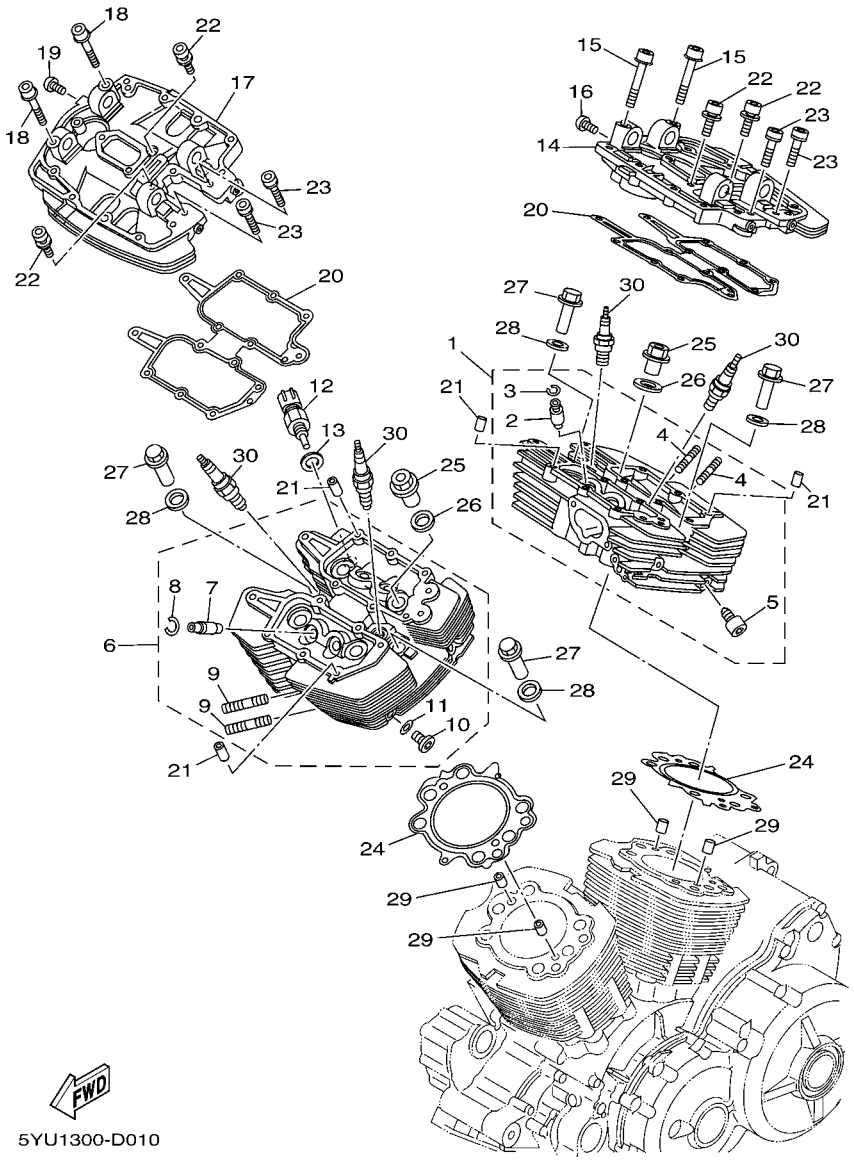

FIG. 1 CYLINDER HEAD

REF. NO.	PART NO.	DESCRIPTION	5YU8	5YUB				REMARKS
1	5YU–11102–10	CYLINDER HEAD ASSY	1	1				
2	4WM–11133–10	.GUIDE, VALVE 1	4	4				
3	93440–12052	.CIRCLIP	4	4				
4	95617–08625	.BOLT, STUD	2	2				
5	5YU–11112–00	.PLUG, BLIND 1	1	1				
6	5YU–11103–10	CYLINDER HEAD ASSY 2	1	1				
7	4WM–11133–10	.GUIDE, VALVE 1	4	4				
8	93440–12052	.CIRCLIP	4	4				
9	95617–08625	.BOLT, STUD	2	2				
10	90340–12112	.PLUG, STRAIGHT SCREW	1	1				
11	90201–12790	.WASHER, PLATE	1	1				
12	5PX–83591–00	THERMO UNIT	1	1				
13	90201–12172	WASHER, PLATE	1	1				
14	5YU–11131–10	HEAD, CYLINDER 3	1	1				
15	90110–08033	BOLT, HEXAGON SOCKET HEAD	2	2				
16	92014–06010	BOLT, BUTTON HEAD	1	1				
17	5YU–11141–10	HEAD, CYLINDER 4	1	1				
18	90110–08033	BOLT, HEXAGON SOCKET HEAD	2	2				
19	92014–06010	BOLT, BUTTON HEAD	1	1				
20	5PX–11182–00	GASKET, CYLINDER HEAD 2	2	2				
21	91808–16023	PIN, DOWEL	4	4				
22	90110–06155	BOLT, HEXAGON SOCKET HEAD	4	4				
23	90109–061F7	BOLT	4	4				
24	5PX–11181–01	GASKET, CYLINDER HEAD 1	2	2				
25	5YU–11171–00	NUT, HOLDING	8	8				
26	90201–18017	WASHER, PLATE	8	8				
27	4WM–11172–00	NUT, HOLDING	4	4				

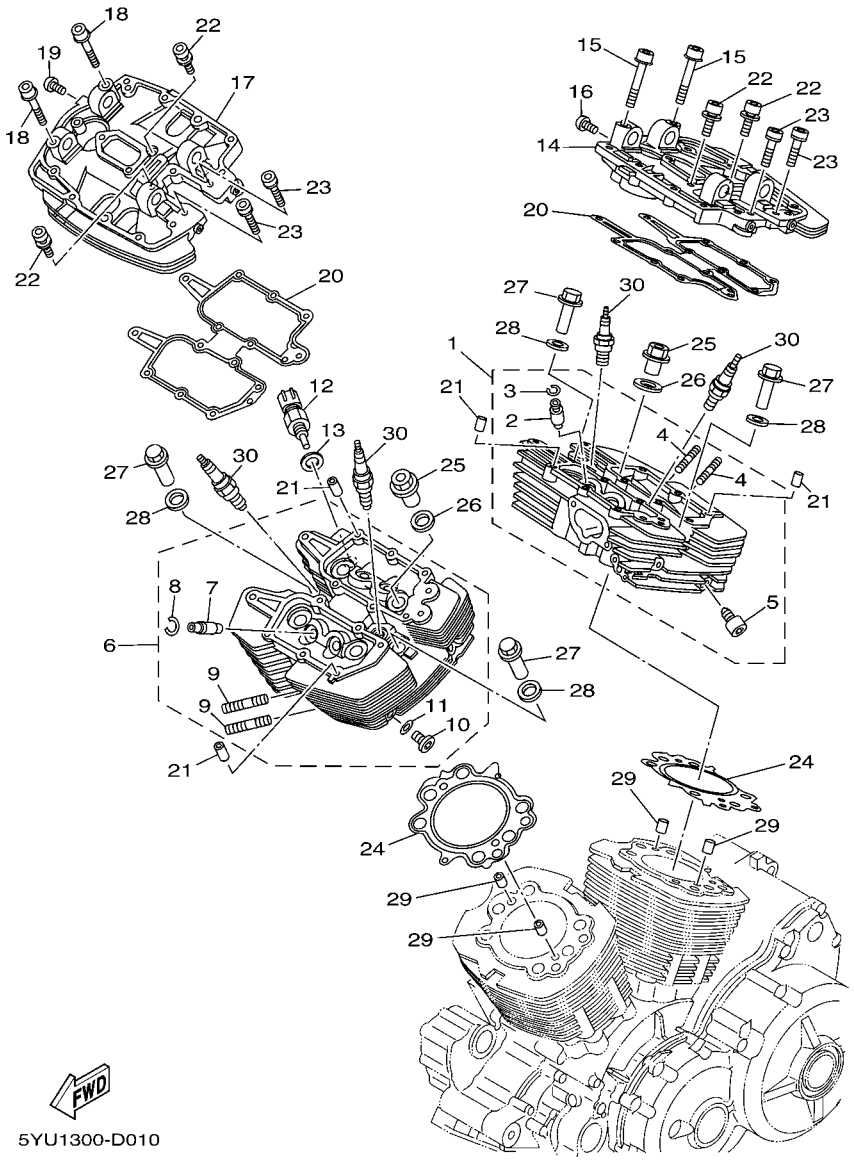

FIG. 1 CYLINDER HEAD

REF. NO.	PART NO.	DESCRIPTION	5YU8	5YUB				REMARKS
28	4WM–11176–00	WASHER, HOLDING	4	4				
29	90387–062T5	COLLAR	4	4				
30	94701–00262	PLUG, SPARK (NGK DPR7EA)	4	4				UR
	94701–00379	PLUG, SPARK (ND X22EPR-U9)	4	4				UR

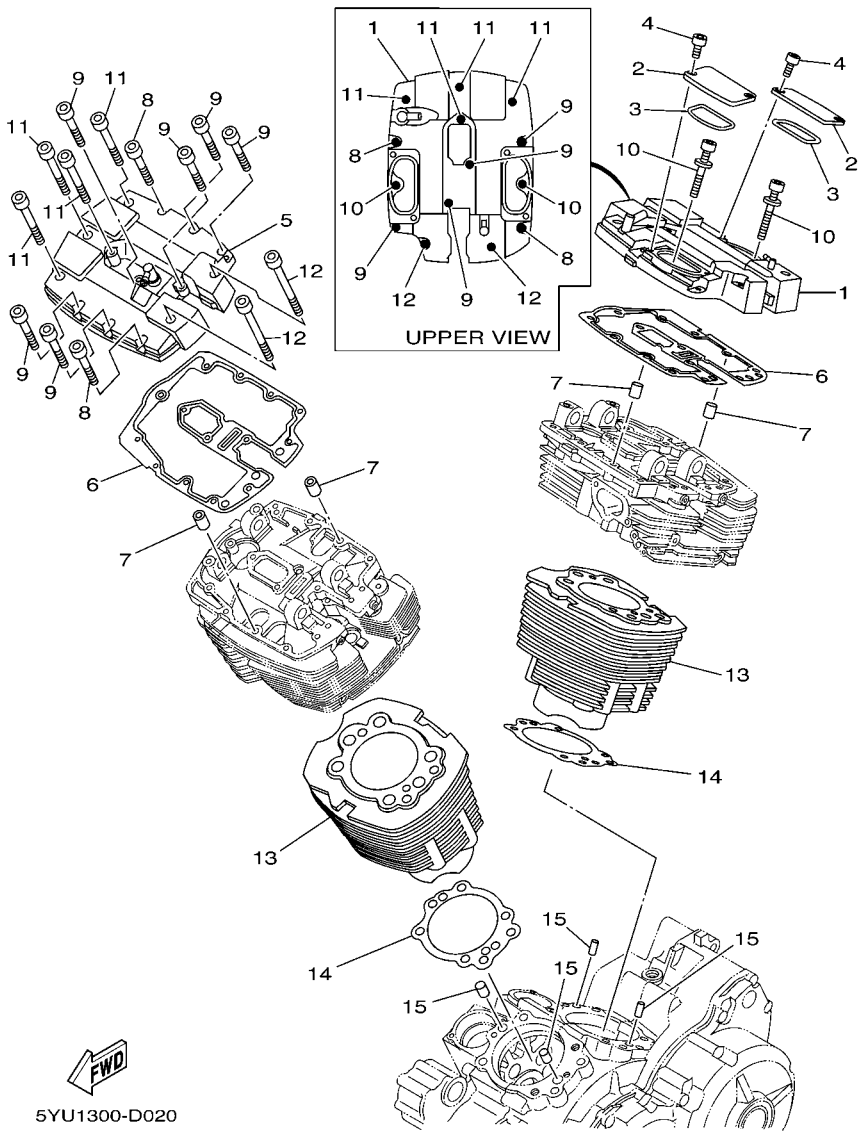

FIG. 2 CYLINDER

REF. NO.	PART NO.	DESCRIPTION	5YU8	5YUB				REMARKS
1	5YU–1110M–10	COVER ASSY 1	1	1				
2	5YU–11186–10	COVER, CYLINDER HEAD SIDE 2	2	2				
3	93210–63001	O-RING	2	2				
4	91314–06016	BOLT	4	4				
5	5YU–1110N–10	COVER ASSY 2	1	1				
6	5PX–11193–00	GASKET, HEAD COVER 1	2	2				
7	91808–16023	PIN, DOWEL	4	4				
8	91314–06060	BOLT	4	4				
9	91314–06050	BOLT	10	10				
10	90110–06151	BOLT, HEXAGON SOCKET HEAD	2	2				
11	90110–06154	BOLT, HEXAGON SOCKET HEAD	8	8				
12	90110–06086	BOLT, HEXAGON SOCKET HEAD	4	4				
13	5YU–11311–10	CYLINDER 1	2	2				
14	4WM–11351–00	GASKET, CYLINDER	2	2				
15	90387–087A5	COLLAR	4	4				

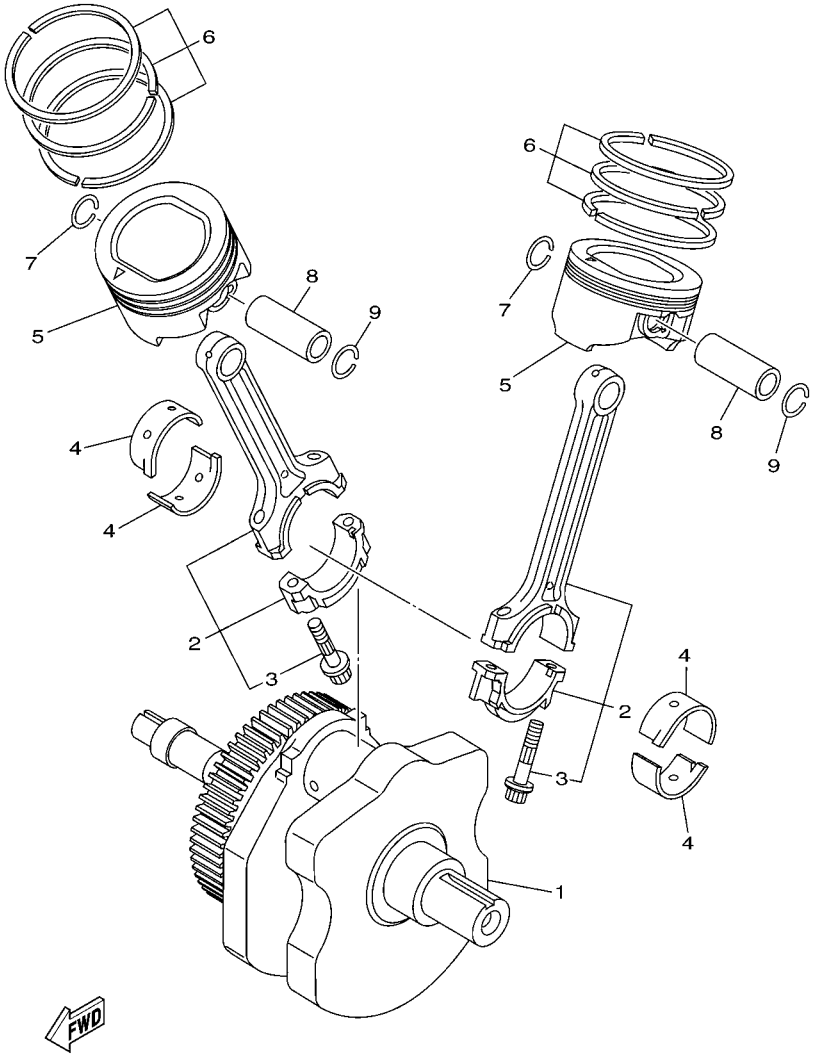

5YU1300-D030

FIG. 3 CRANKSHAFT & PISTON

REF. NO.	PART NO.	DESCRIPTION	5YU8	5YUB				REMARKS
1	5YU–11400–01	CRANKSHAFT ASSY	1	1				
2	5YU–11650–00	CONNECTING ROD ASSY	2	2				
3	5YU–11654–00	.BOLT, CONNECTING ROD	2	2				
4	5YU–11656–00	PLANE BEARING, CONNECTING ROD	4	4				UR BLUE
	5YU–11656–10	PLANE BEARING, CONNECTING ROD	4	4				UR BLACK
	5YU–11656–20	PLANE BEARING, CONNECTING ROD	4	4				UR BROWN
	5YU–11656–30	PLANE BEARING, CONNECTING ROD	4	4				UR GREEN
	5YU–11656–40	PLANE BEARING, CONNECTING ROD	4	4				UR YELLOW
5	5PX–11631–00	PISTON (STD)	2	2				
6	5YU–11610–00	PISTON RING SET (STD)	2	2				
7	93450–24028	CIRCLIP	2	2				
8	4WM–11633–00	PIN, PISTON	2	2				
9	93450–24028	CIRCLIP	2	2				

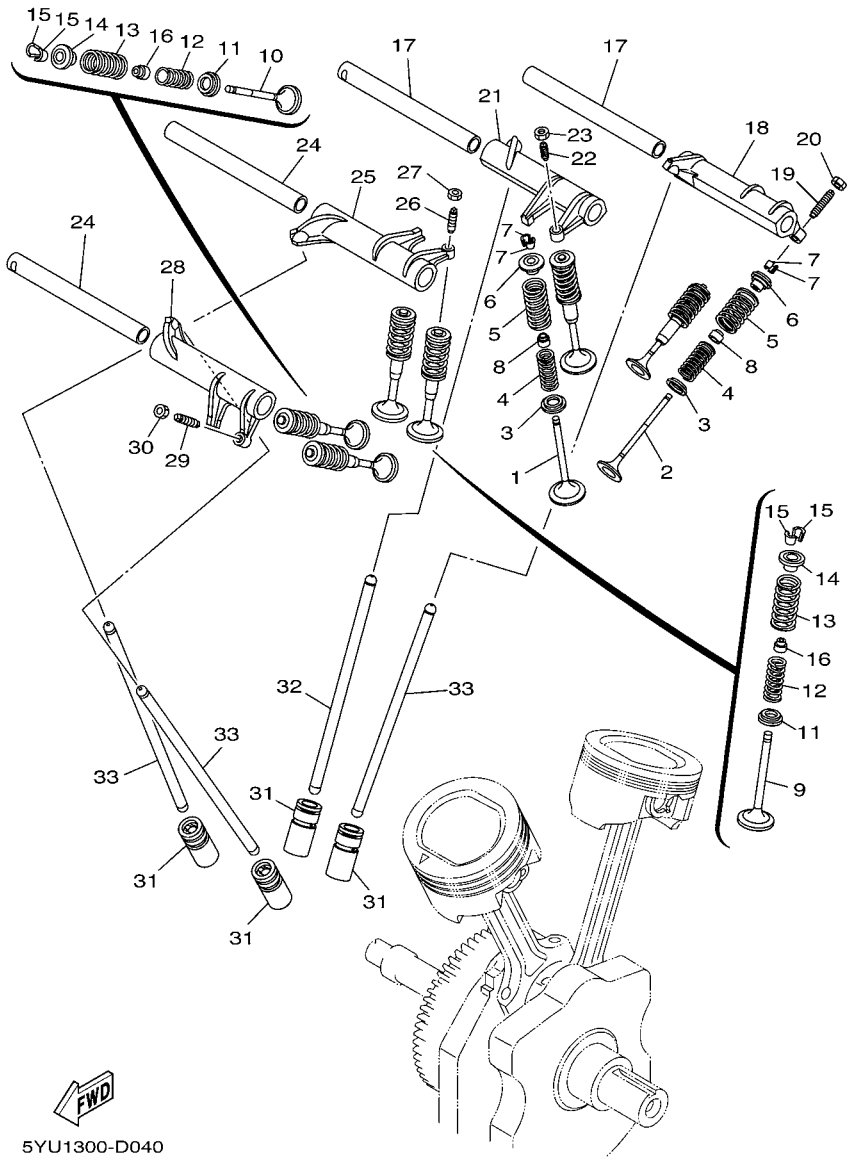

FIG. 4 VALVE

REF. NO.	PART NO.	DESCRIPTION	5YU8	5YUB				REMARKS
1	5YU–12111–00	VALVE, INTAKE	2	2				
2	5YU–12121–00	VALVE, EXHAUST	2	2				
3	26H–12116–00	SEAT, VALVE SPRING	4	4				
4	4WM–12113–00	SPRING, VALVE INNER	4	4				
5	4WM–12114–00	SPRING, VALVE OUTER	4	4				
6	26H–12117–00	RETAINER, VALVE SPRING	4	4				
7	4G0–12118–00	COTTER, VALVE	8	8				
8	4KM–12119–00	SEAL, VALVE STEM	4	4				
9	5YU–12111–00	VALVE, INTAKE	2	2				
10	5YU–12121–00	VALVE, EXHAUST	2	2				
11	26H–12116–00	SEAT, VALVE SPRING	4	4				
12	4WM–12113–00	SPRING, VALVE INNER	4	4				
13	4WM–12114–00	SPRING, VALVE OUTER	4	4				
14	26H–12117–00	RETAINER, VALVE SPRING	4	4				
15	4G0–12118–00	COTTER, VALVE	8	8				
16	4KM–12119–00	SEAL, VALVE STEM	4	4				
17	1D7–12146–00	SHAFT, ROCKER	2	2				
18	5PX–12151–00	ARM, VALVE ROCKER	1	1				
19	31G–12159–02	SCREW, VALVE ADJUSTING	1	1				
20	31G–12158–00	NUT, LOCK	1	1				
21	5PX–12161–00	ARM, VALVE ROCKER 2	1	1				
22	31G–12159–02	SCREW, VALVE ADJUSTING	1	1				
23	31G–12158–00	NUT, LOCK	1	1				
24	1D7–12146–00	SHAFT, ROCKER	2	2				
25	5PX–12151–00	ARM, VALVE ROCKER	1	1				
26	31G–12159–02	SCREW, VALVE ADJUSTING	1	1				
27	31G–12158–00	NUT, LOCK	1	1				

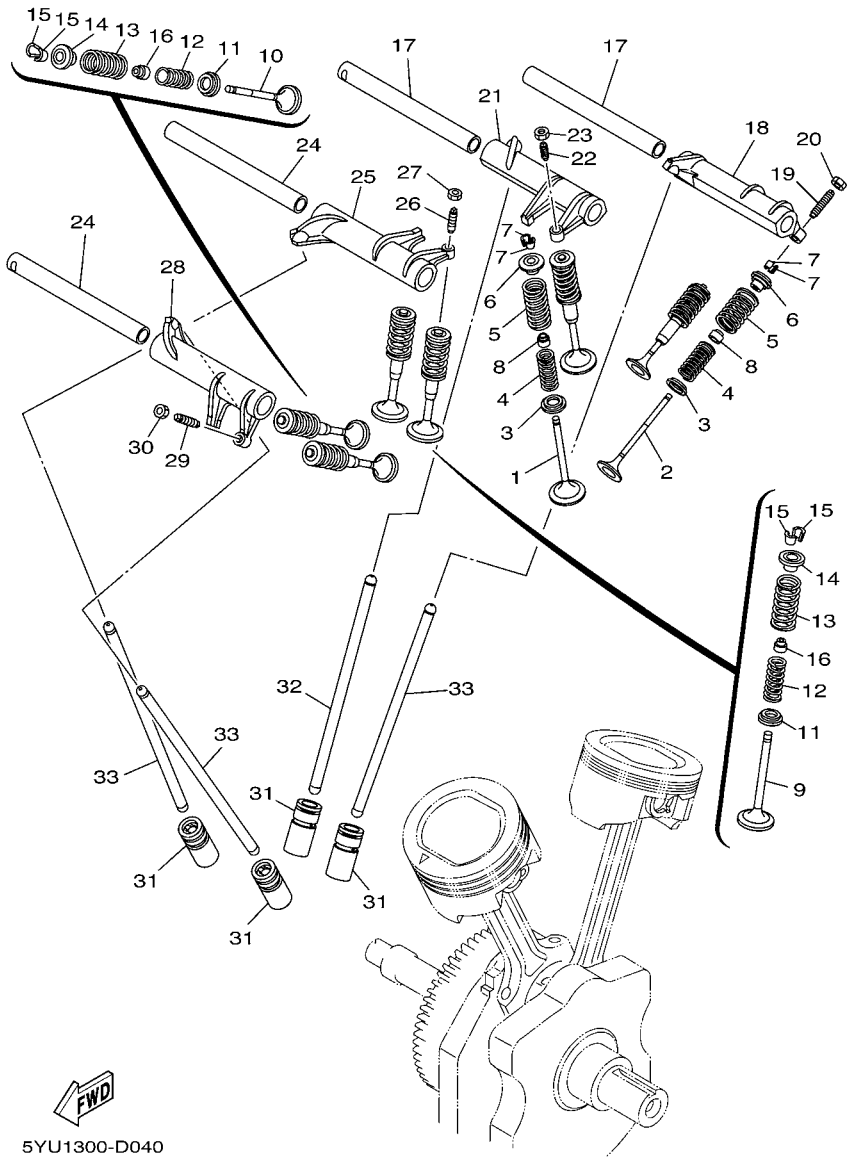

FIG. 4 VALVE

REF. NO.	PART NO.	DESCRIPTION	5YU8	5YUB				REMARKS
28	5PX–12161–00	ARM, VALVE ROCKER 2	1	1				
29	31G–12159–02	SCREW, VALVE ADJUSTING	1	1				
30	31G–12158–00	NUT, LOCK	1	1				
31	4WM–12153–10	LIFTER, VALVE	4	4				
32	5PX–12144–00	ROD, VALVE PUSH 2	1	1				
33	5PX–12154–00	ROD, VALVE PUSH	3	3				

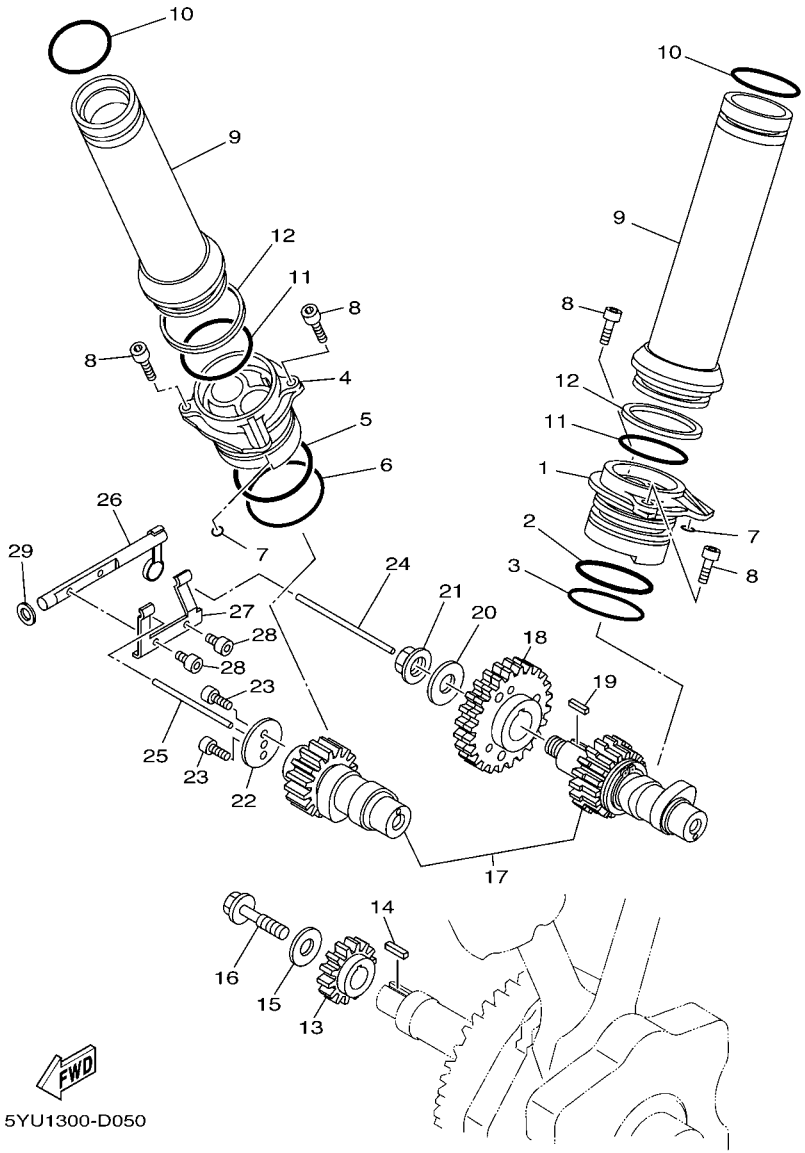

FIG. 5 CAMSHAFT & CHAIN

REF. NO.	PART NO.	DESCRIPTION	5YU8	5YUB				REMARKS
1	5PX–12147–00	HOUSING	1	1				
2	93210–54175	O-RING	1	1				
3	93210–54452	O-RING	1	1				
4	5PX–12148–00	HOUSING	1	1				
5	93210–54175	O-RING	1	1				
6	93210–54452	O-RING	1	1				
7	93210–48364	O-RING	2	2				
8	90110–06022	BOLT, HEXAGON SOCKET HEAD	4	4				
9	5YU–12155–00	GUIDE, PUSH ROD	2	2				
10	93210–40745	O-RING	2	2				
11	93210–472A9	O-RING	2	2				
12	5PX–12215–00	CAP, TENSIONER CASE	2	2				
13	4WM–11534–00	GEAR, BREAKER DRIVE	1	1				
14	90282–03039	KEY, STRAIGHT	1	1				
15	90201–100L3	WASHER, PLATE	1	1				
16	90105–10290	BOLT, FLANGE	1	1				
17	5YU–W1211–00	CAM SHAFT ASSY	1	1				
18	5YU–115A0–00	DRIVEN GEAR ASSY	1	1				
19	90282–03012	KEY, STRAIGHT	1	1				
20	90201–140H8	WASHER, PLATE	1	1				
21	90179–14469	NUT	1	1				
22	4WM–11951–00	PLATE	1	1				
23	90110–05013	BOLT, HEXAGON SOCKET HEAD	2	2				
24	4WM–12298–00	ROD, DECOMPRESSION	1	1				
25	4WM–12294–00	PIPE, DECOMPRESSION	1	1				
26	4WM–12293–00	CONNECTOR, DECOMPRESSION	1	1				
27	4WM–12282–00	LEVER, DECOMPRESSION	1	1				

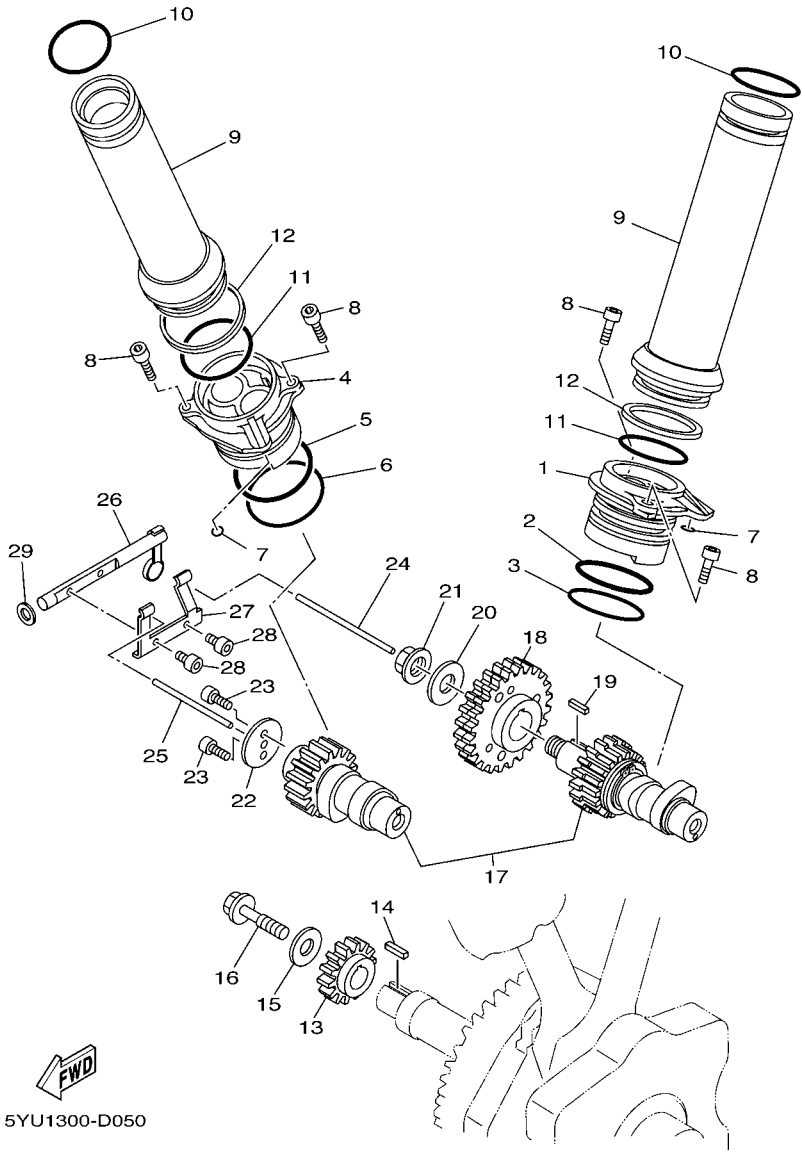

FIG. 5 CAMSHAFT & CHAIN

REF. NO.	PART NO.	DESCRIPTION	5YU8	5YUB				REMARKS
28	90110–04001	BOLT, HEXAGON SOCKET HEAD	2	2				
29	90201–08086	WASHER, PLATE	1	1				

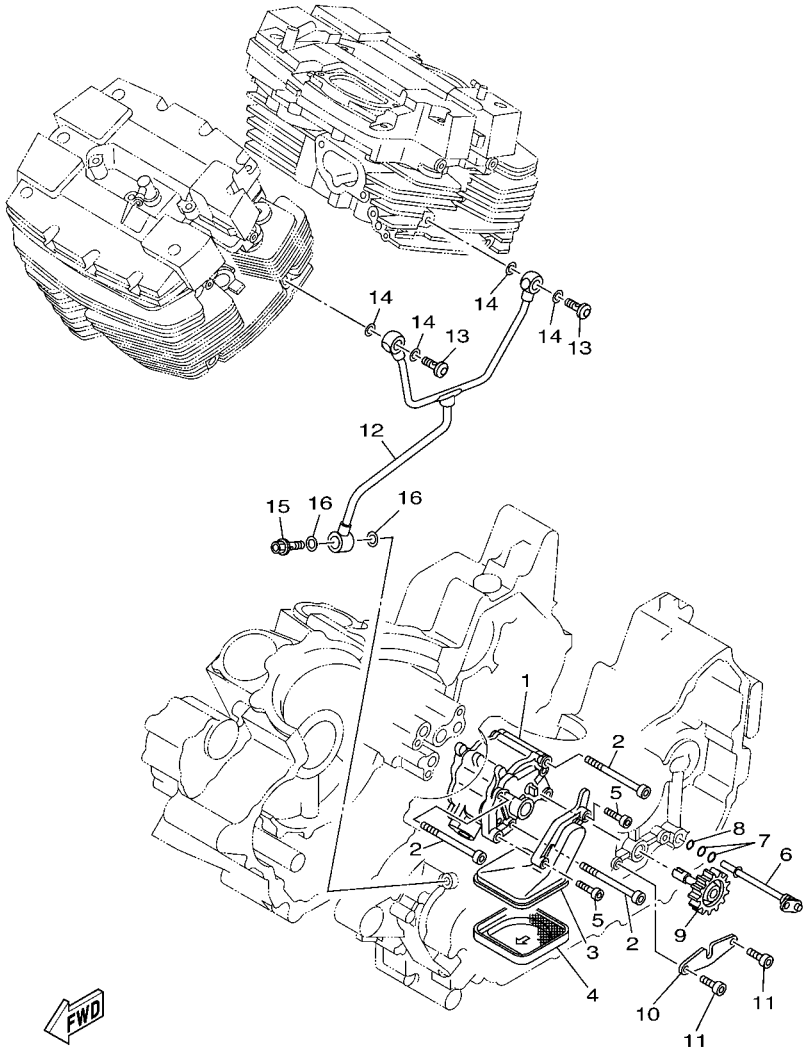

5YU1300-D060

FIG. 6 OIL PUMP

REF. NO.	PART NO.	DESCRIPTION	5YU8	5YUB				REMARKS
1	5YU–13300–00	OIL PUMP ASSY	1	1				
2	91317–06080	BOLT	3	3				
3	5YU–13412–00	HOUSING, STRAINER	1	1				
4	4WM–13411–00	STRAINER, OIL	1	1				
5	90110–06057	BOLT, HEXAGON SOCKET HEAD	2	2				
6	4WM–13171–00	PIPE, DELIVERY 2	1	1				
7	93210–09350	O-RING	2	2				
8	93210–06667	O-RING	1	1				
9	5YU–13360–00	DRIVEN GEAR ASSY	1	1				
10	4WM–1357N–01	PLATE, STOPPER 1	1	1				
11	91317–06016	BOLT	2	2				
12	5YU–13405–00	OIL PIPE COMP. 1	1	1				
13	90401–10175	BOLT, UNION	2	2				
14	90430–10188	GASKET	4	4				
15	90401–08001	BOLT, UNION	1	1				
16	90430–08119	GASKET	2	2				

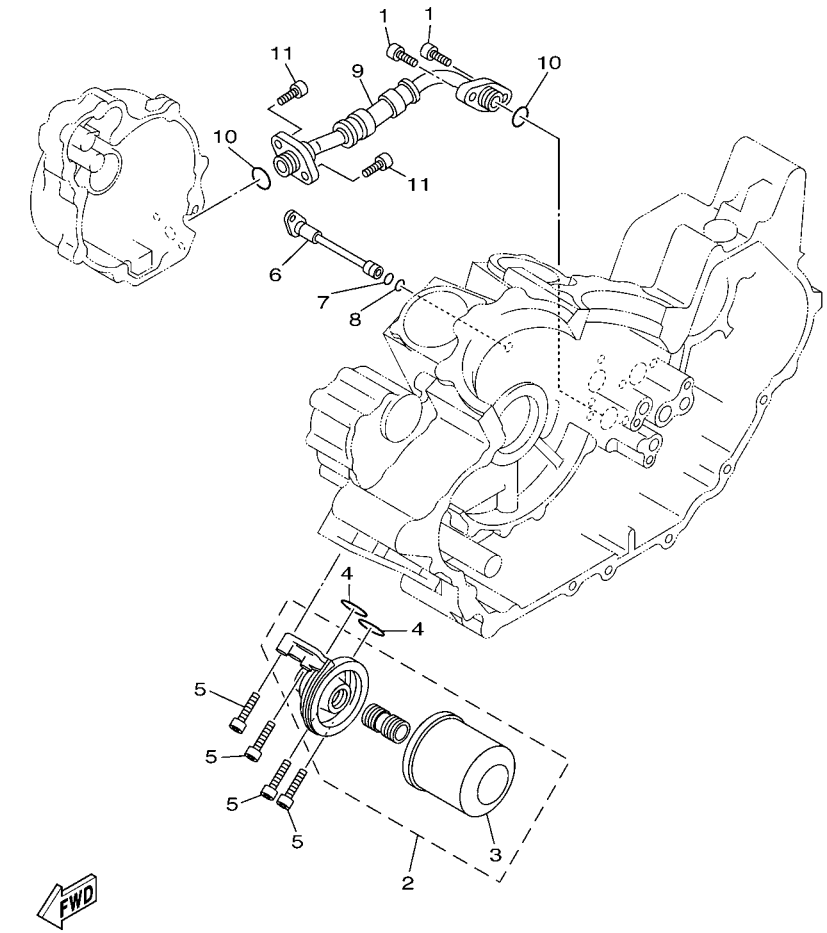

5YU1300-D070

FIG. 7 OIL CLEANER

REF. NO.	PART NO.	DESCRIPTION	5YU8	5YUB				REMARKS
1	90110–06106	BOLT, HEXAGON SOCKET HEAD	2	2				
2	5YU–1344A–10	OIL CLEANER SUB-ASSY	1	1				
3	3FV–13440–10	.ELEMENT ASSY, OIL CLEANER	1	1				
4	93210–23326	O-RING	2	2				
5	90110–06047	BOLT, HEXAGON SOCKET HEAD	4	4				
6	4WM–13181–00	PIPE, DELIVERY 3	1	1				
7	93210–08003	O-RING	1	1				
8	93210–07435	O-RING	1	1				
9	5YU–13161–00	PIPE, DELIVERY 1	1	1				
10	93210–13657	O-RING	2	2				
11	90110–06106	BOLT, HEXAGON SOCKET HEAD	2	2				

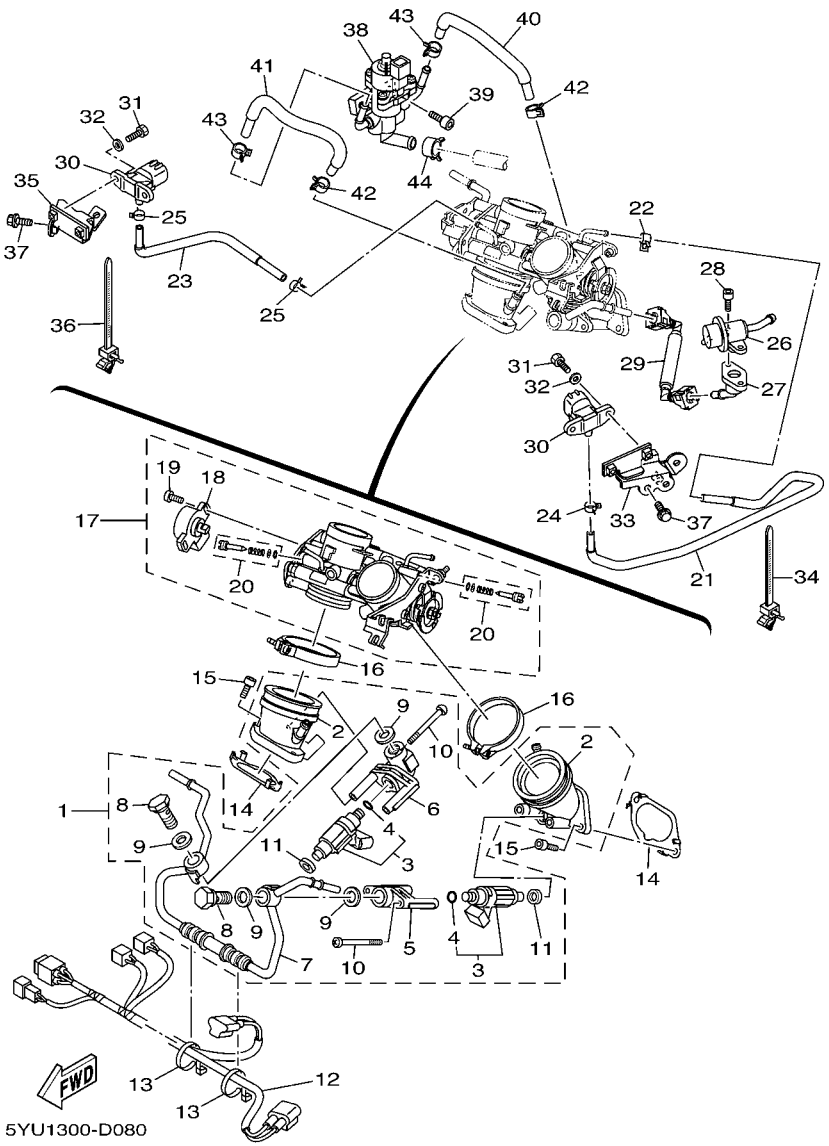

FIG. 8 INTAKE

REF. NO.	PART NO.	DESCRIPTION	5YU8	5YUB				REMARKS
1	5YU–13590–00	CARBURETOR JOINT ASSY	1	1				
2	5PX–13586–00	.JOINT, CARBURETOR 1	2	2				
3	5YU–13761–00	.INJECTOR ASSY	2	2				
4	5FL–14147–00	..O-RING	1	1				
5	5PX–14188–00	.CONNECTOR	1	1				
6	5PX–14189–00	.CONNECTOR	1	1				
7	5YU–13938–00	.PIPE	1	1				
8	4BH–13573–00	.BOLT 1	2	2				
9	90430–12219	.GASKET	4	4				
10	98507–06050	.SCREW, PAN HEAD	4	4				
11	90430–09002	.GASKET	2	2				
12	5YU–82509–10	WIRE, SUB LEAD	1	1				
13	90465–10098	CLAMP	2	2				
14	5PX–14239–00	SEAL	2	2				
15	91314–06020	BOLT	4	4				
16	90450–57092	HOSE CLAMP ASSY	2	2				
17	5YU–13750–01	THROTTLE BODY ASSY	1	1				
18	5PX–85885–01	.THROTTLE SENSOR ASSY	1	1				
19	4KM–24453–00	.SCREW	2	2				
20	5JW–14104–00	.AIR SCREW SET	2	2				
21	5YU–13895–00	HOSE, AIR	1	1				
22	90467–07093	CLIP	1	1				
23	5YU–13892–00	HOSE, AIR 2	1	1				
24	90467–07093	CLIP	1	1				
25	90467–07093	CLIP	2	2				
26	5YU–13906–00	REGULATOR, PRESSURE	1	1				
27	5YU–13595–00	JOINT	1	1				

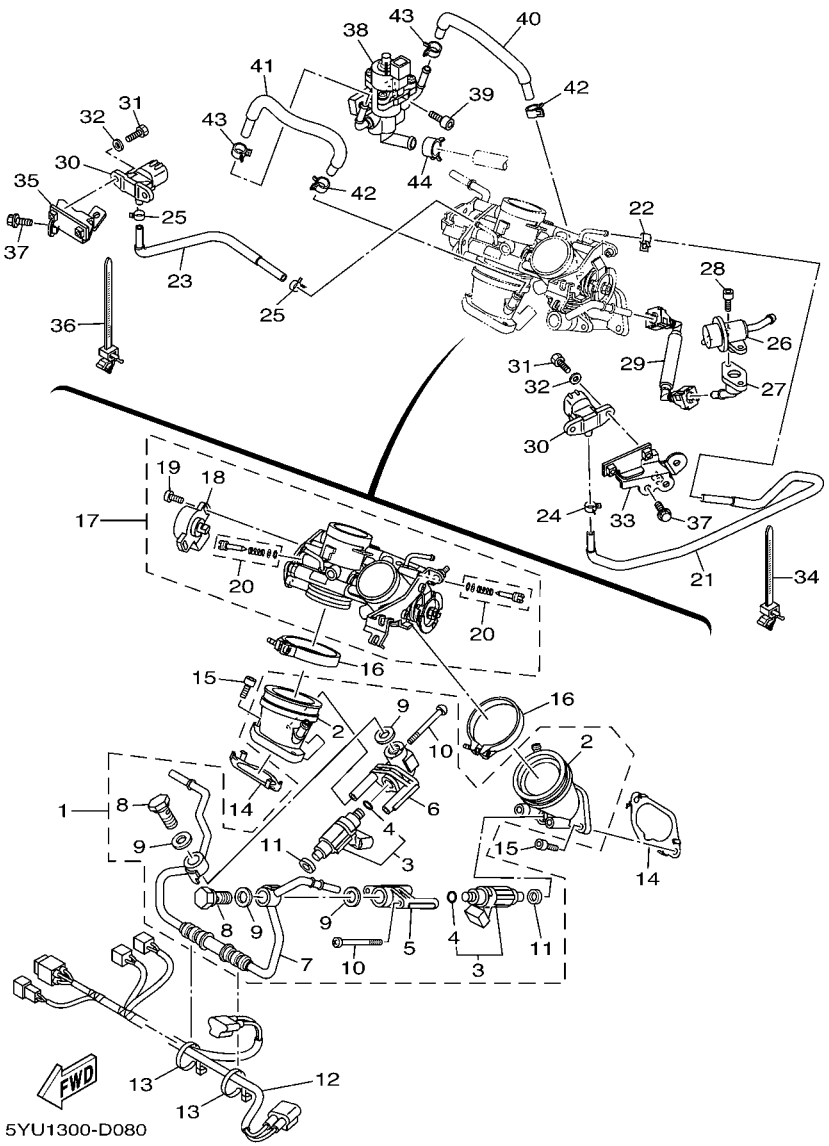

FIG. 8 INTAKE

REF. NO.	PART NO.	DESCRIPTION	5YU8	5YUB				REMARKS
28	91317–05016	BOLT	2	2				
29	5YU–13972–00	PIPE, FUEL 2	1	1				
30	5PS–82380–00	SENSOR, PRESSURE	2	2				
31	97007–05016	BOLT	4	4				
32	92907–05600	WASHER, PLATE	4	4				
33	5YU–2138K–00	BRACKET, 1	1	1				
34	90464–12036	CLAMP	1	1				
35	5YU–2138L–00	BRACKET 2	1	1				
36	90464–10112	CLAMP	1	1				
37	95027–06016	BOLT, FLANGE	4	4				
38	5YU–85880–00	LINEAR, CONTROL VALVE	1	1				
39	91317–06020	BOLT	2	2				
40	5YU–13545–00	HOSE 1	1	1				
41	5YU–13546–00	HOSE 2	1	1				
42	90467–10135	CLIP	2	2				
43	90467–11136	CLIP	2	2				
44	90467–15001	CLIP	1	1				

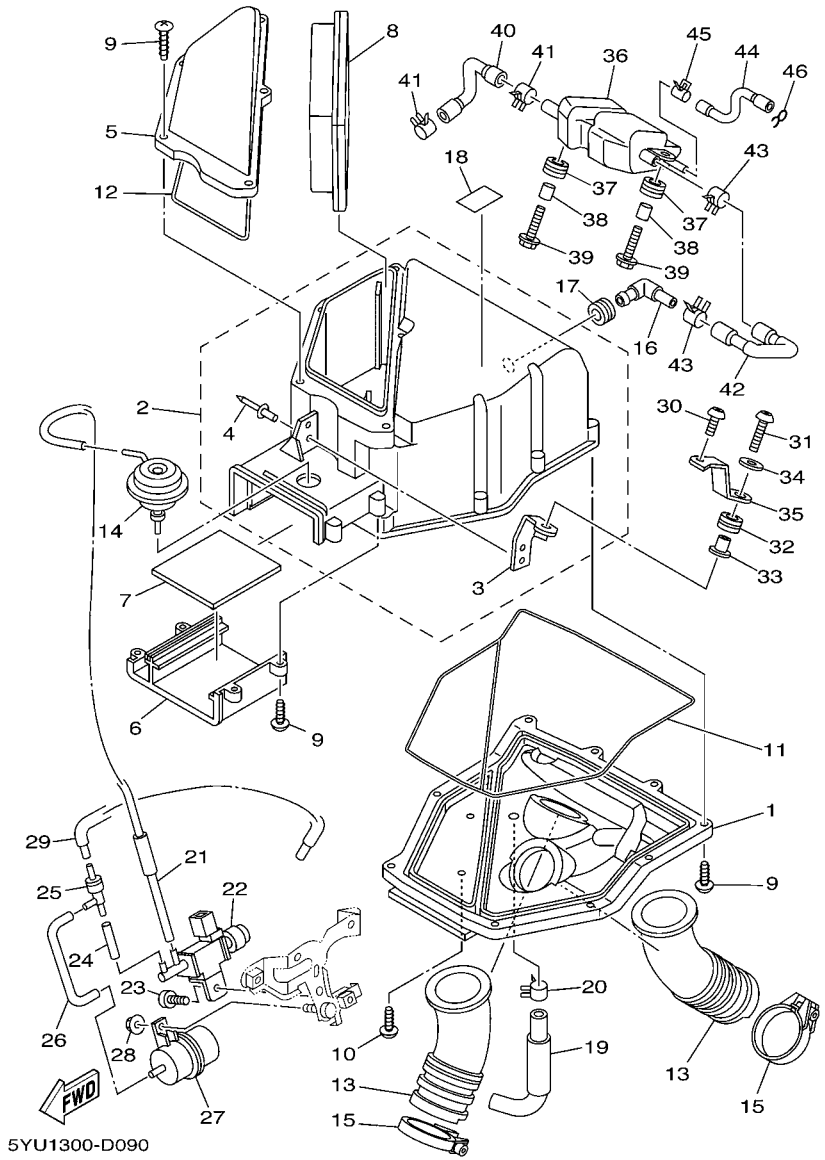

FIG. 9 INTAKE 2

REF. NO.	PART NO.	DESCRIPTION	5YU8	5YUB				REMARKS
1	5YU–14411–00	CASE, AIR CLEANER 1	1	1				
2	5YU–W1441–00	AIR CLEANER CASE COMP.	1	1				
3	5YU–14432–00	.STAY 1	1	1				
4	90267–40102	.RIVET, BLIND	2	2				
5	5YU–1441A–00	COVER, CLEANER CASE 1	1	1				
6	5YU–1441E–00	COVER, CLEANER CASE 2	1	1				
7	5YU–1357J–00	VALVE 1	1	1				
8	5YU–14451–00	ELEMENT, AIR CLEANER	1	1				
9	97707–50525	SCREW, TAPPING	18	18				
10	97707–50516	SCREW, TAPPING	2	2				
11	5YU–14452–00	SEAL	1	1				
12	5YU–14457–00	SEAL	1	1				
13	5YU–14453–00	JOINT, AIR CLEANER 1	2	2				
14	5YU–14545–00	DIAPHRAGM	1	1				
15	90450–52004	HOSE CLAMP ASSY	2	2				
16	31A–14419–00	PIPE	1	1				
17	31A–14435–00	GROMMET	1	1				
18	5YU–12666–00	FASTENER	1	1				
19	5YU–13897–00	PIPE, AIR	1	1				
20	90467–15001	CLIP	1	1				
21	5YU–14419–00	PIPE	1	1				
22	5PS–1410H–00	FUEL CUT SOLENOID VALVE	1	1				
23	98907–05012	SCREW, BIND	1	1				
24	5YU–14423–00	PIPE, SUCTION 1	1	1				
25	5PS–14552–00	VALVE, CHECK	1	1				
26	5YU–1446F–00	JOINT, SURGE TANK 1	1	1				
27	5PS–1446E–00	TANK, SURGE	1	1				

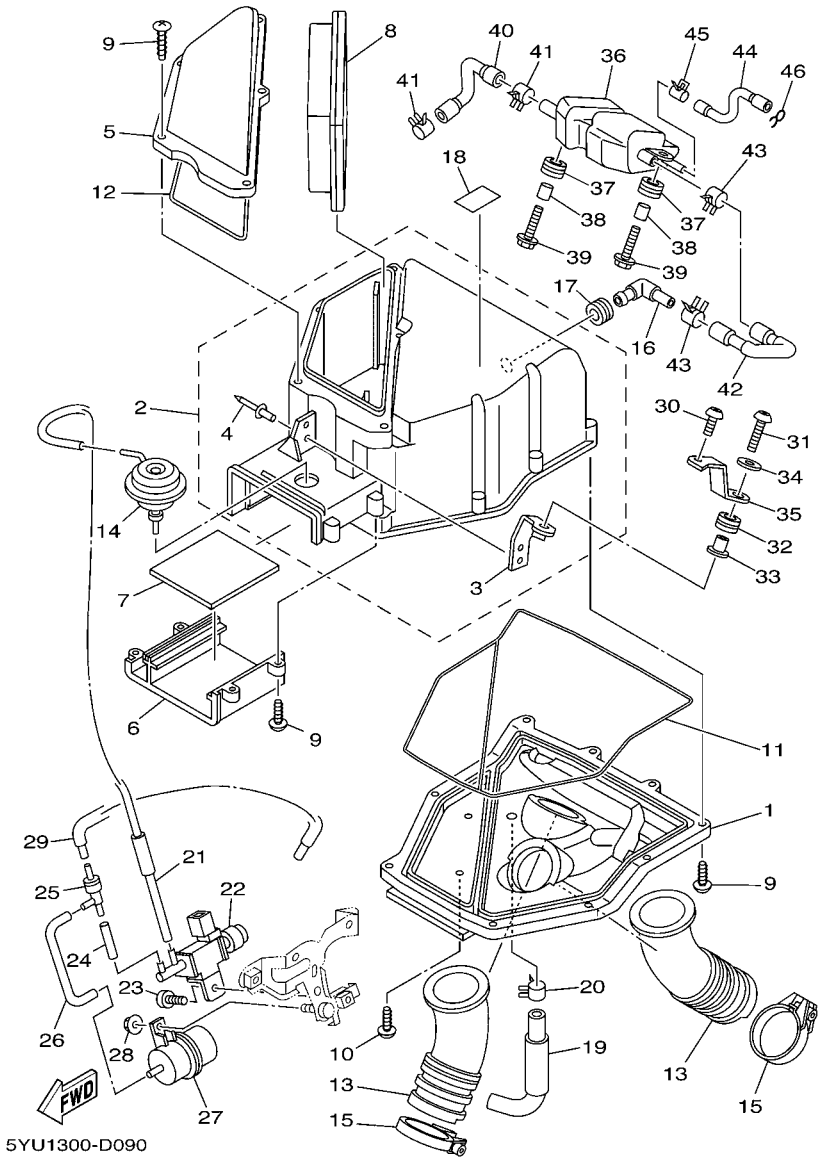

FIG. 9 INTAKE 2

REF. NO.	PART NO.	DESCRIPTION	5YU8	5YUB				REMARKS
28	95707–05500	NUT, FLANGE	1	1				
29	5YU–14433–00	PIPE, SUCTION 2	1	1				
30	92017–06012	BOLT, BUTTON HEAD	1	1				
31	92017–06025	BOLT, BUTTON HEAD	1	1				
32	90480–14023	GROMMET	1	1				
33	90387–07391	COLLAR	1	1				
34	90209–06250	WASHER	1	1				
35	5YU–14414–00	STAY 2	1	1				
36	5YU–15371–00	BREATHER	1	1				
37	90480–12497	GROMMET	2	2				
38	90387–067V1	COLLAR	2	2				
39	90105–06557	BOLT, FLANGE	2	2				
40	5YU–11166–00	PIPE, BREATHER 1	1	1				
41	90467–15001	CLIP	2	2				
42	5YU–11167–00	PIPE, BREATHER 2	1	1				
43	90467–15001	CLIP	2	2				
44	5YU–1116J–00	PIPE 6	1	1				
45	90467–08092	CLIP	1	1				
46	90467–08003	CLIP	1	1				

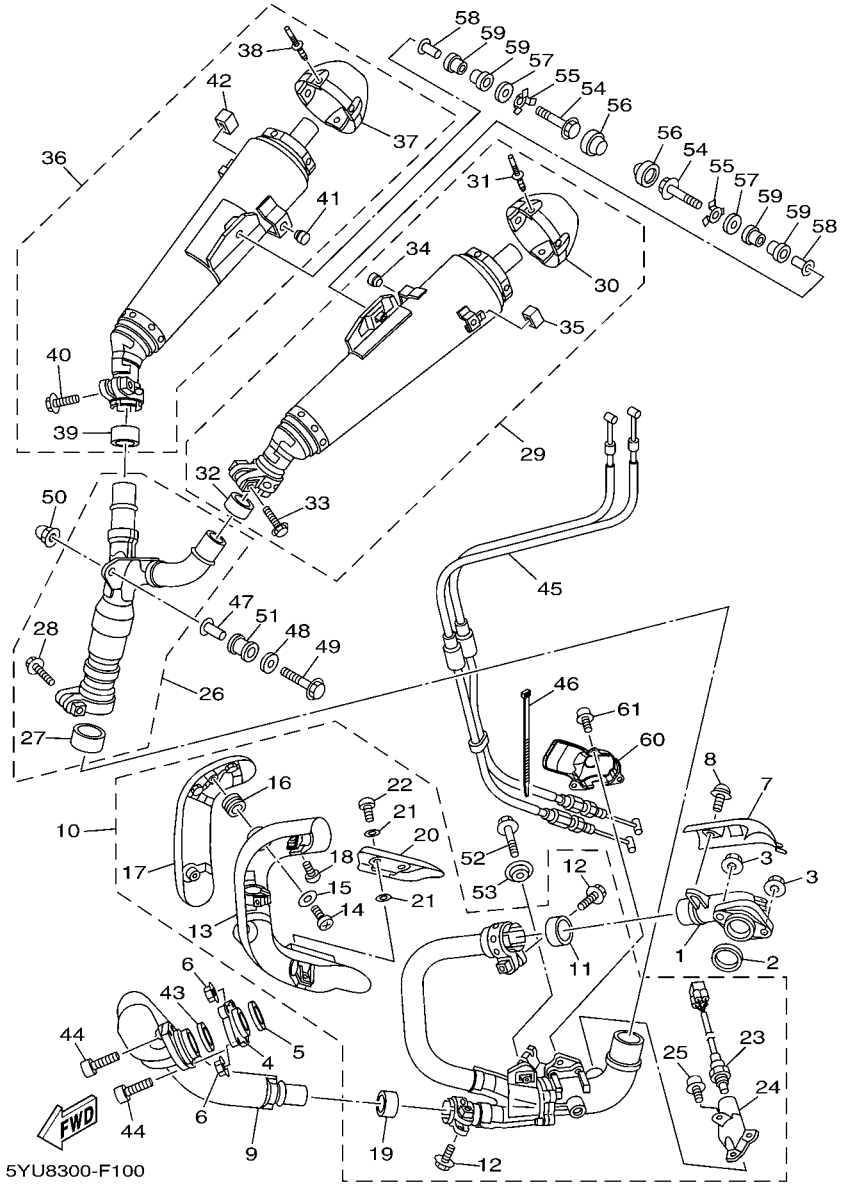

FIG. 10 EXHAUST

REF. NO.	PART NO.	DESCRIPTION	5YU8	5YUB				REMARKS
1	5YU–14615–00	JOINT, EXHAUST 1	1	1				
2	3EG–14613–00	GASKET, EXHAUST PIPE	1	1				
3	90185–08097	NUT, SELF-LOCKING	2	2				
4	5YU–1465H–00	JOINT 3	1	1				
5	3EG–14613–00	GASKET, EXHAUST PIPE	1	1				
6	90185–08097	NUT, SELF-LOCKING	2	2				
7	5YU–14628–00	PROTECTOR, EXHAUST PIPE	1	1				
8	90111–06060	BOLT,HEX. SOCKET BUTTON	3	3				
9	5YU–14620–00	EXHAUST PIPE ASSY 2	1	1				
10	5YU–14610–20	EXHAUST PIPE ASSY 1	1	1				
11	5YU–14755–00	.GASKET, SILENCER	1	1				
12	92014–08035	.BOLT, BUTTON HEAD	2	2				
13	5YU–14718–00	.PROTECTOR, MUFFLER 1	1	1				
14	98904–06012	.SCREW, BIND	2	2				
15	90201–064K6	.WASHER, PLATE	2	2				
16	90480–17001	.GROMMET	2	2				
17	5YU–14728–00	.PROTECTOR, MUFFLER 2	1	1				
18	92014–08020	.BOLT, BUTTON HEAD	3	3				
19	5PX–14755–00	.GASKET, SILENCER	1	1				
20	5YU–14738–00	.PROTECTOR, MUFFLER 3	1	1				
21	90201–05015	.WASHER, PLATE	4	4				
22	90111–06031	.BOLT,HEX. SOCKET BUTTON	2	2				
23	5YU–8592A–20	.SENSOR	1	1				
24	5YU–1479H–00	.COVER, 1	1	1				
25	90119–06115	.BOLT, WITH WASHER	2	2				
26	5YU–14740–20	CATALYST ASSY.	1	1				
27	5YU–14714–10	.GASKET, MUFFLER	1	1				

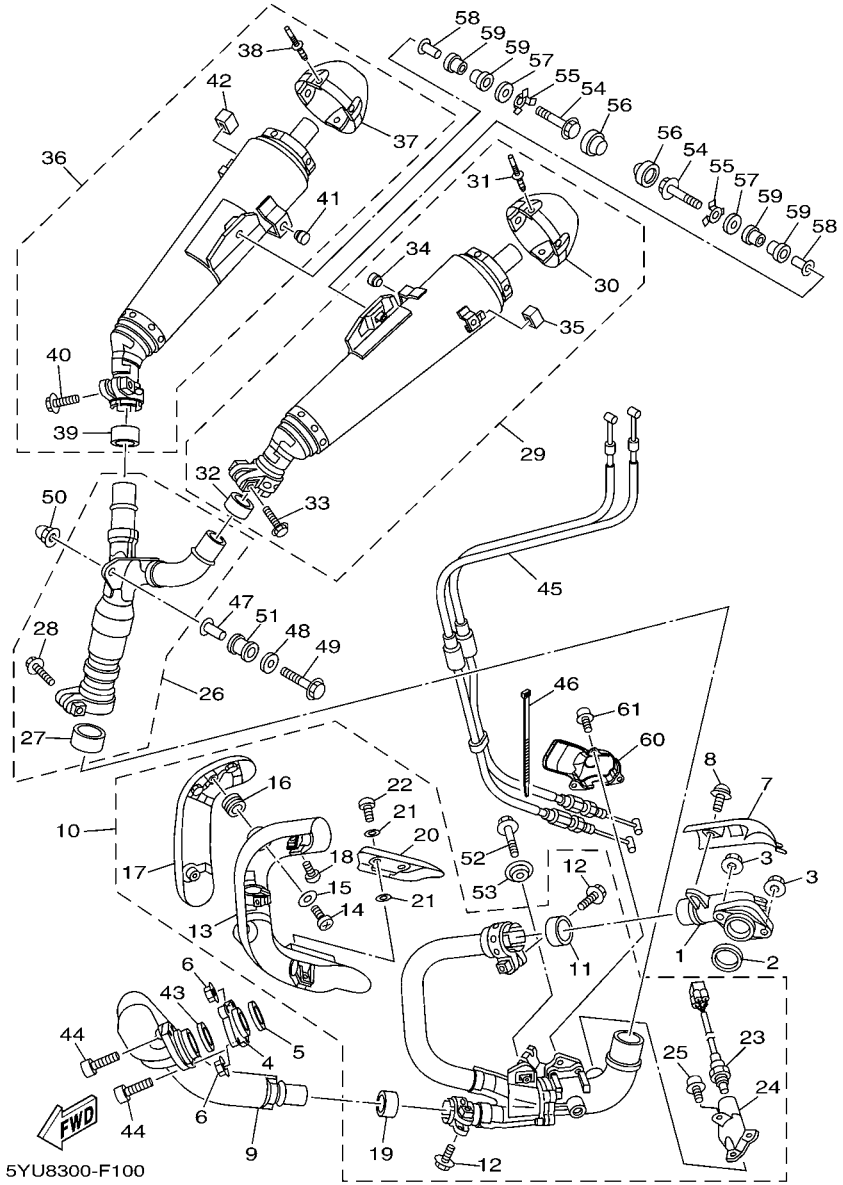

FIG. 10 EXHAUST

REF. NO.	PART NO.	DESCRIPTION	5YU8	5YUB				REMARKS
28	95024–08035	.BOLT, FLANGE	1	1				
29	5YU–14710–20	MUFFLER ASSY 1	1	1				
30	5YU–14799–20	.CAP	1	1				
31	90267–48017	.RIVET, BLIND	4	4				
32	5YU–14755–10	.GASKET, SILENCER	1	1				
33	95024–08035	.BOLT, FLANGE	1	1				
34	4FM–24181–00	.DAMPER, LOCATING 1	1	1				
35	5YU–1473B–00	.DAMPER, MUFFLER	1	1				
36	5YU–14720–20	MUFFLER ASSY 2	1	1				
37	5YU–14798–20	.CAP, SILENCER 2	1	1				
38	90267–48017	.RIVET, BLIND	4	4				
39	5YU–14755–10	.GASKET, SILENCER	1	1				
40	95024–08035	.BOLT, FLANGE	1	1				
41	4FM–24181–00	.DAMPER, LOCATING 1	1	1				
42	5YU–1473B–00	.DAMPER, MUFFLER	1	1				
43	3EG–14613–00	GASKET, EXHAUST PIPE	1	1				
44	91314–08030	BOLT	2	2				
45	5YU–1130E–00	CABLE PULLEY ASSY	1	1				
46	1UA–82591–00	BAND	1	1				
47	90387–082W9	COLLAR	1	1				
48	90201–083A8	WASHER, PLATE	1	1				
49	95824–08040	BOLT, FLANGE	1	1				
50	90176–08080	NUT, CROWN	1	1				
51	5YU–14757–00	DAMPER, MUFFLER 2	1	1				
52	90105–08093	BOLT, FLANGE	1	1				
53	90209–08249	WASHER	1	1				
54	95817–08045	BOLT, FLANGE	2	2				

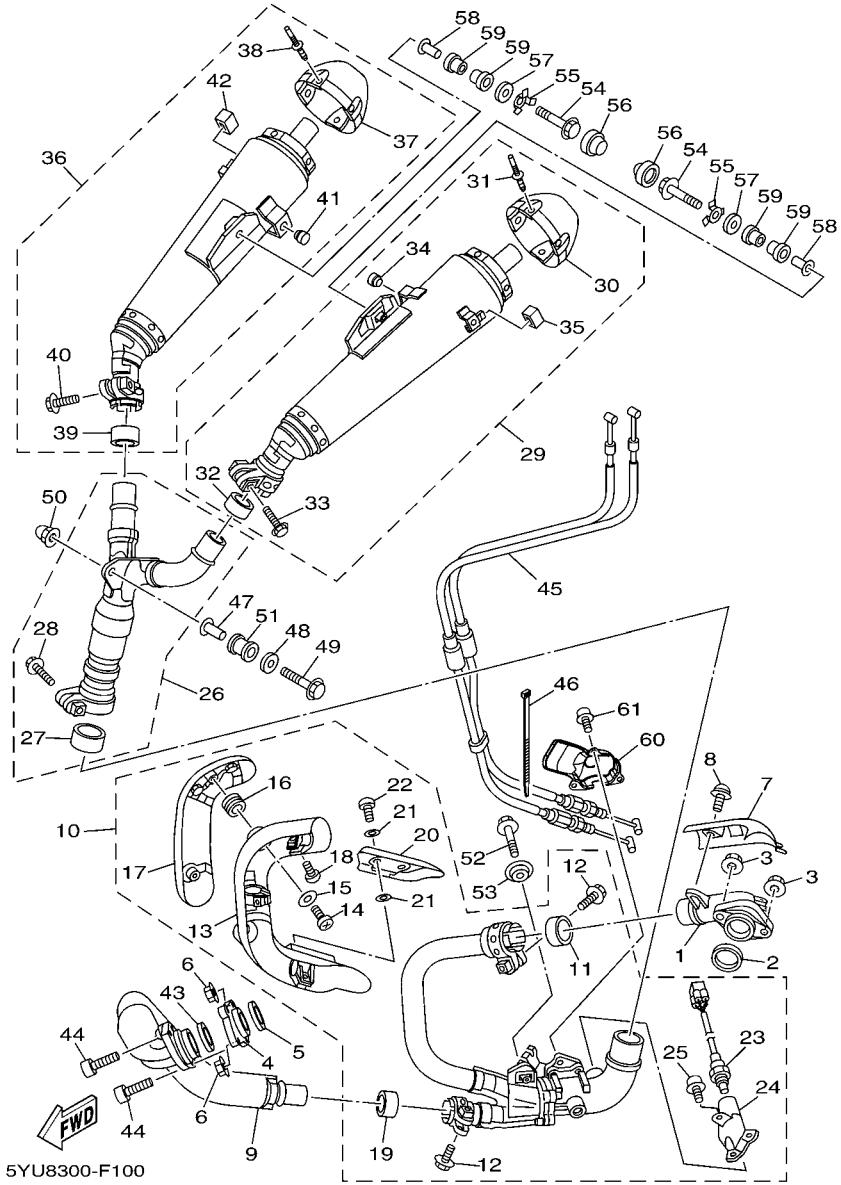

FIG. 10 EXHAUST

REF. NO.	PART NO.	DESCRIPTION	5YU8	5YUB				REMARKS
55	5YU–14766–00	WASHER, PROTECTOR	2	2				
56	5YU–1479J–00	COVER 2	2	2				
57	90201–08034	WASHER, PLATE	2	2				
58	90387–08039	COLLAR	2	2				
59	5YU–14747–00	DAMPER, MUFFLER	4	4				
60	5YU–14826–00	PROTECTOR, EXHAUST	1	1				
61	90119–06115	BOLT, WITH WASHER	3	3				

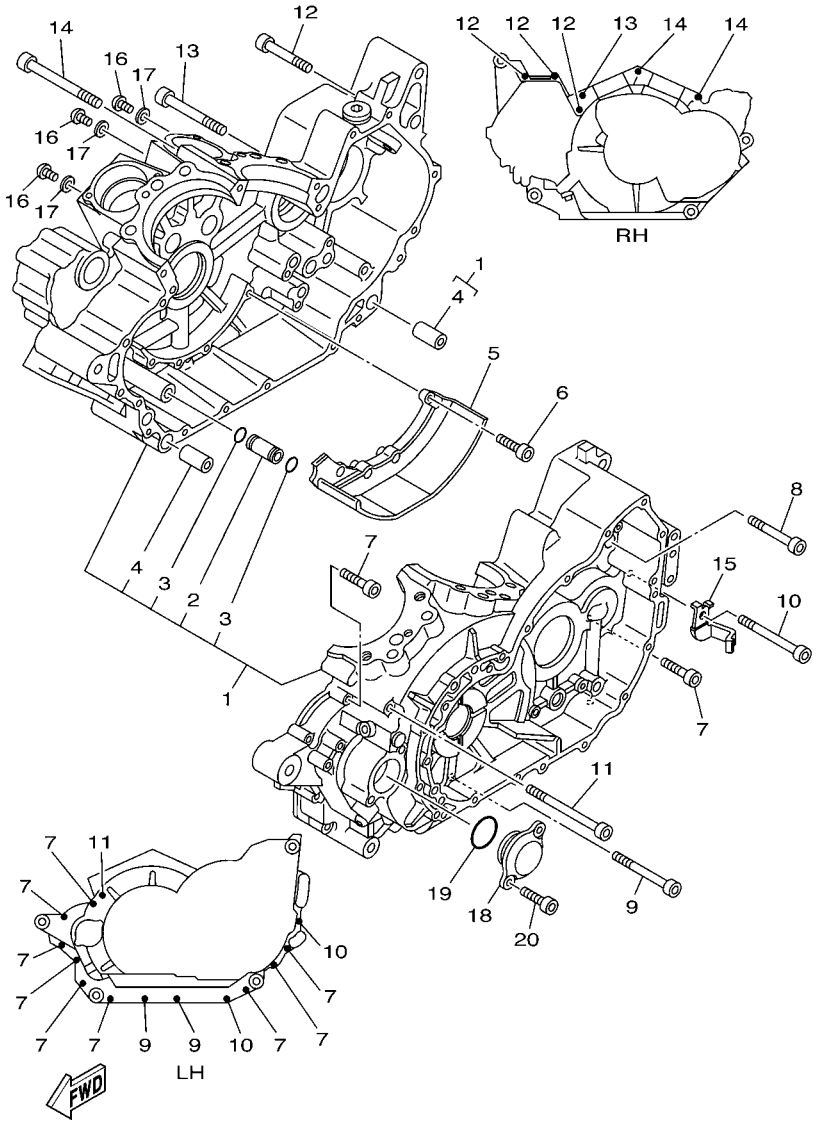

FIG. 11 CRANKCASE

REF. NO.	PART NO.	DESCRIPTION	5YU8	5YUB				REMARKS
1	5YU–15100–20	CRANKCASE ASSY	1	1				
2	4WM–15138–00	.NOZZLE 1	1	1				
3	93210–10001	.O-RING	2	2				
4	99530–14016	.PIN, DOWEL	2	2				
5	4WM–15123–00	PLATE, BAFFLE 1	1	1				
6	90110–06044	BOLT, HEXAGON SOCKET HEAD	4	4				
7	91314–06040	BOLT	9	9				
8	91314–06060	BOLT	1	1				
9	91314–06075	BOLT	2	2				
10	91314–06085	BOLT	2	2				
11	91314–06105	BOLT	1	1				
12	91314–06060	BOLT	3	3				
13	91314–08080	BOLT	1	1				
14	91314–08100	BOLT	2	2				
15	90462–10029	CLAMP	1	1				
16	92014–05010	BOLT, BUTTON HEAD	3	3				
17	90430–05126	GASKET	3	3				
18	5YU–15417–00	COVER, CAP	1	1				
19	93210–36769	O-RING	1	1				
20	91314–06016	BOLT	2	2				

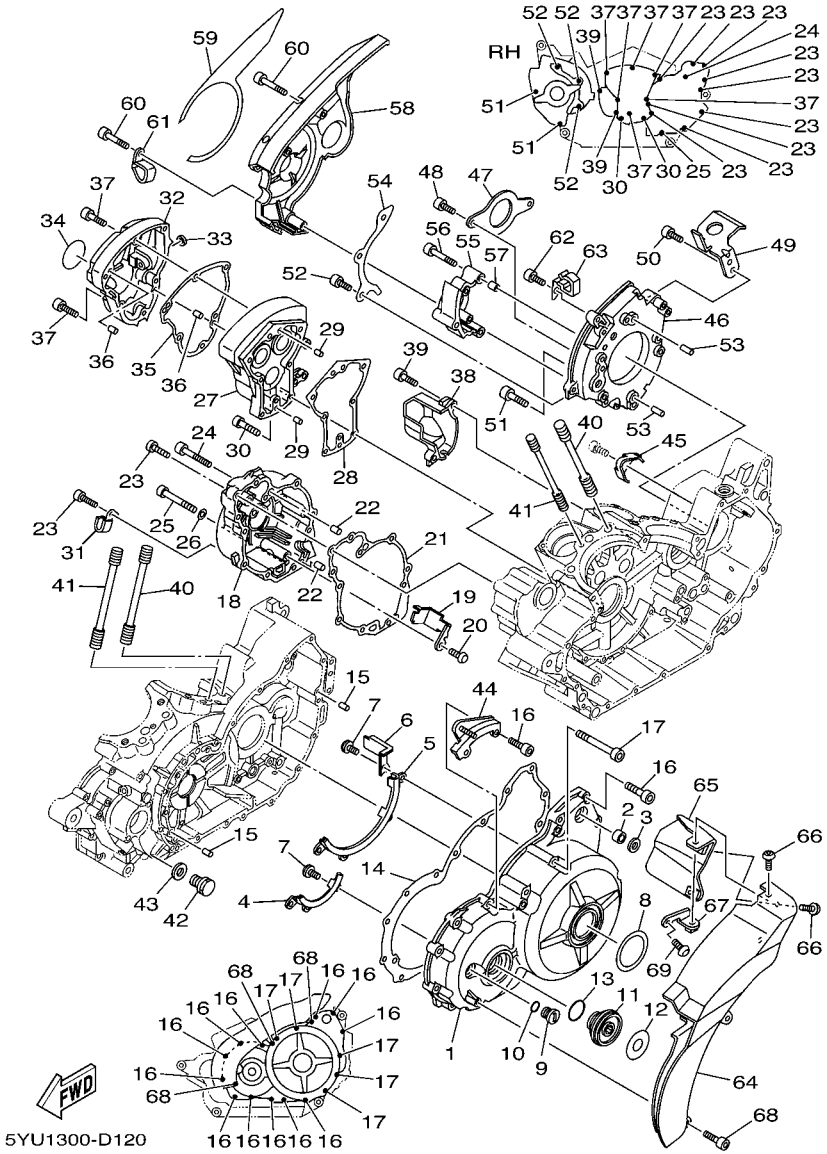

FIG. 12 CRANKCASE COVER 1

REF. NO.	PART NO.	DESCRIPTION	5YU8	5YUB				REMARKS
1	5YU–15411–10	COVER, CRANKCASE 1	1	1				
2	93317–11287	BEARING	1	1				
3	93102–12224	OIL SEAL	1	1				
4	4WM–15142–00	GUIDE 1	1	1				
5	4WM–15143–00	GUIDE	1	1				
6	5YU–15484–00	CLAMP 2	1	1				
7	90149–06057	SCREW	7	7				
8	5YU–15494–00	SEAL, PROTECTOR	1	1				
9	5YU–15189–10	PLUG	1	1				
10	93210–16325	O-RING	1	1				
11	5YU–15425–00	COVER, GENERATOR 2	1	1				
12	5YU–15495–00	SEAL, PROTECTOR 1	1	1				
13	93210–32172	O-RING	1	1				
14	5YU–15451–01	GASKET, CRANKCASE COVER 1	1	1				
15	99530–10114	PIN, DOWEL	2	2				
16	91314–06035	BOLT	12	12				
17	91314–06070	BOLT	5	5				
18	5YU–15421–10	COVER, CRANKCASE 2	1	1				
19	4WM–15377–00	GUIDE, INLET	1	1				
20	90149–06004	SCREW	1	1				
21	5PX–15461–02	GASKET, CRANKCASE COVER 2	1	1				
22	99530–10114	PIN, DOWEL	2	2				
23	91314–06030	BOLT	9	9				
24	91314–06050	BOLT	1	1				
25	91314–06065	BOLT	1	1				
26	90430–06014	GASKET	1	1				
27	5PX–15431–00	COVER, CRANKCASE 3	1	1				

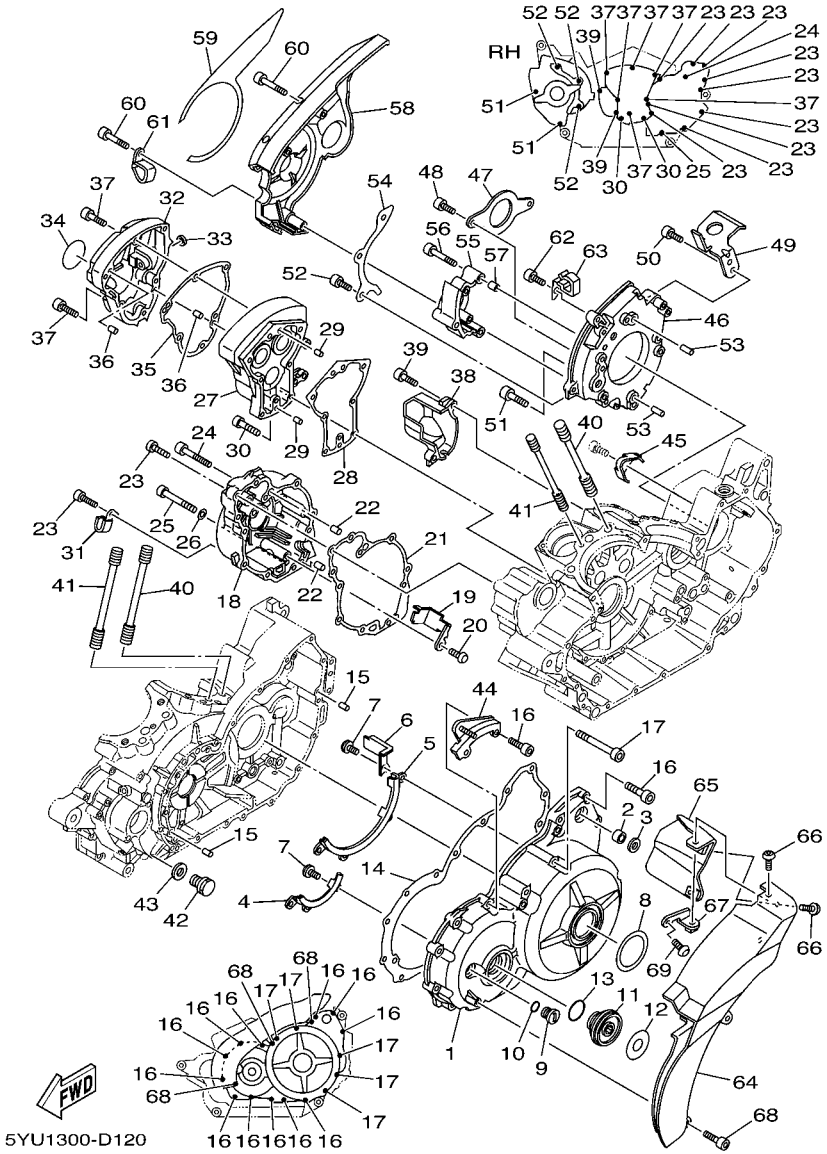

FIG. 12 CRANKCASE COVER 1

REF. NO.	PART NO.	DESCRIPTION	5YU8	5YUB				REMARKS
28	5PX–12286–00	GASKET, DECOMPRESSION	1	1				
29	93606–10227	PIN, DOWEL	2	2				
30	91314–06035	BOLT	7	7				
31	90462–08033	CLAMP	1	1				
32	5YU–12278–10	COVER, DECOMP.	1	1				
33	93104–08089	OIL SEAL	1	1				
34	5YU–15496–00	SEAL, PROTECTOR 2	1	1				
35	5YU–15462–01	GASKET, CRANKCASE COVER 3	1	1				
36	93606–10227	PIN, DOWEL	2	2				
37	91314–06030	BOLT	6	6				
38	5YU–12275–10	COVER, DECOMP LEVER	1	1				
39	91314–06025	BOLT	2	2				
40	90116–12010	BOLT, STUD	8	8				
41	90116–10344	BOLT, STUD	4	4				
42	90340–14132	PLUG, STRAIGHT SCREW	1	1				
43	214–11198–01	GASKET	1	1				
44	5YU–15199–10	BRACKET	1	1				
45	5YU–15413–10	COVER	1	1				
46	5YU–17613–10	STAY	1	1				
47	5YU–17471–00	PLATE, COVER	1	1				
48	91317–06014	BOLT	2	2				
49	5YU–15113–00	PLATE	1	1				
50	90110–06004	BOLT, HEXAGON SOCKET HEAD	2	2				
51	91317–08050	BOLT,HEX.SOCKET HEAD	2	2				
52	90110–08046	BOLT, HEXAGON SOCKET HEAD	3	3				
53	99590–10014	PIN, DOWEL	2	2				
54	5YU–17466–00	GUIDE, CHAIN	1	1				

FIG. 12 CRANKCASE COVER 1

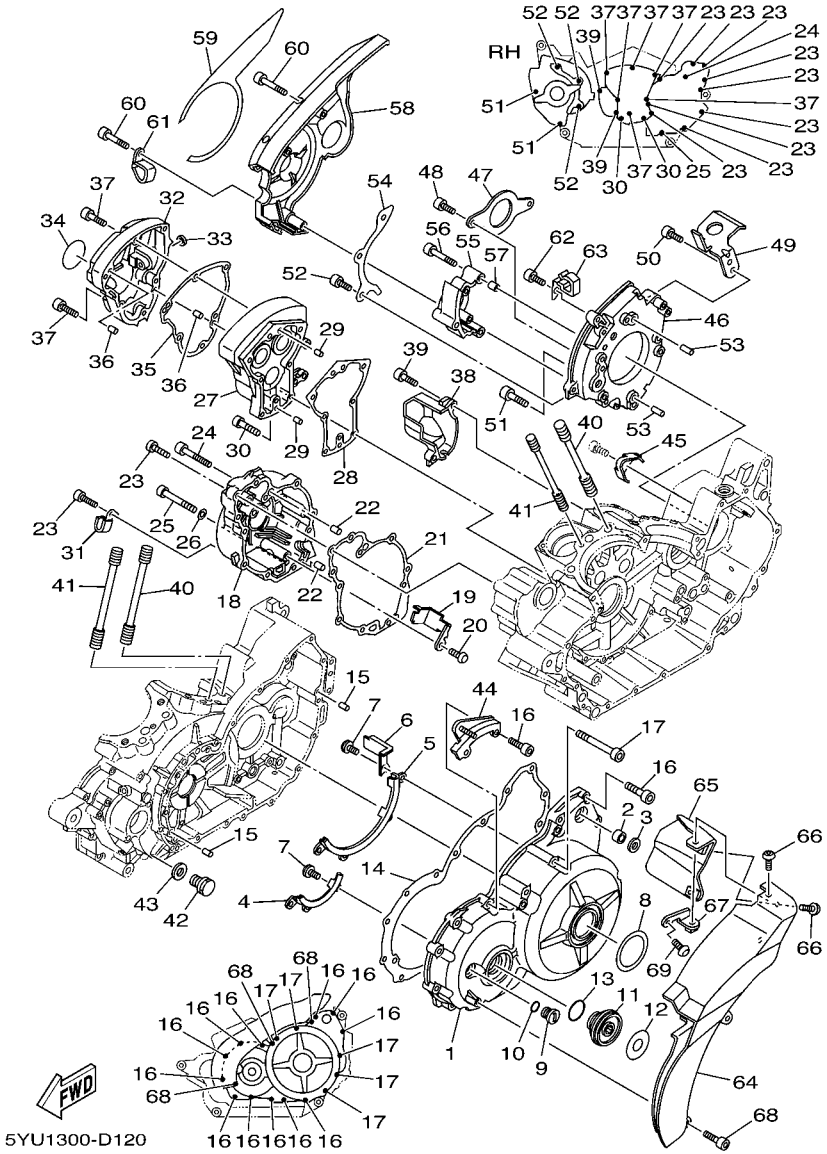

REF. NO.	PART NO.	DESCRIPTION	5YU8	5YUB				REMARKS
55	5YU–1541A–10	STAY,CRANKCASECOVER 1	1	1				
56	91317–06050	BOLT	2	2				
57	99590–10114	PIN, DOWEL	2	2				
58	5YU–15418–20	COVER, CHAIN CASE	1	1				
59	5YU–1549D–00	SEAL, PROTECTOR	1	1				
60	91314–06045	BOLT	3	3				
61	90461–10012	CLAMP	1	1				
62	91314–06012	BOLT	1	1				
63	90462–10028	CLAMP	1	1				
64	5YU–15471–10	DUCT, AIR	1	1				
65	5YU–15472–10	SEAL, AIR DUCT	1	1				
66	92014–06012	BOLT, BUTTON HEAD	3	3				
67	5YU–1541E–00	STAY, COVER	1	1				
68	90110–06152	BOLT, HEXAGON SOCKET HEAD	3	3				
69	90111–05013	BOLT,HEX. SOCKET BUTTON	1	1				

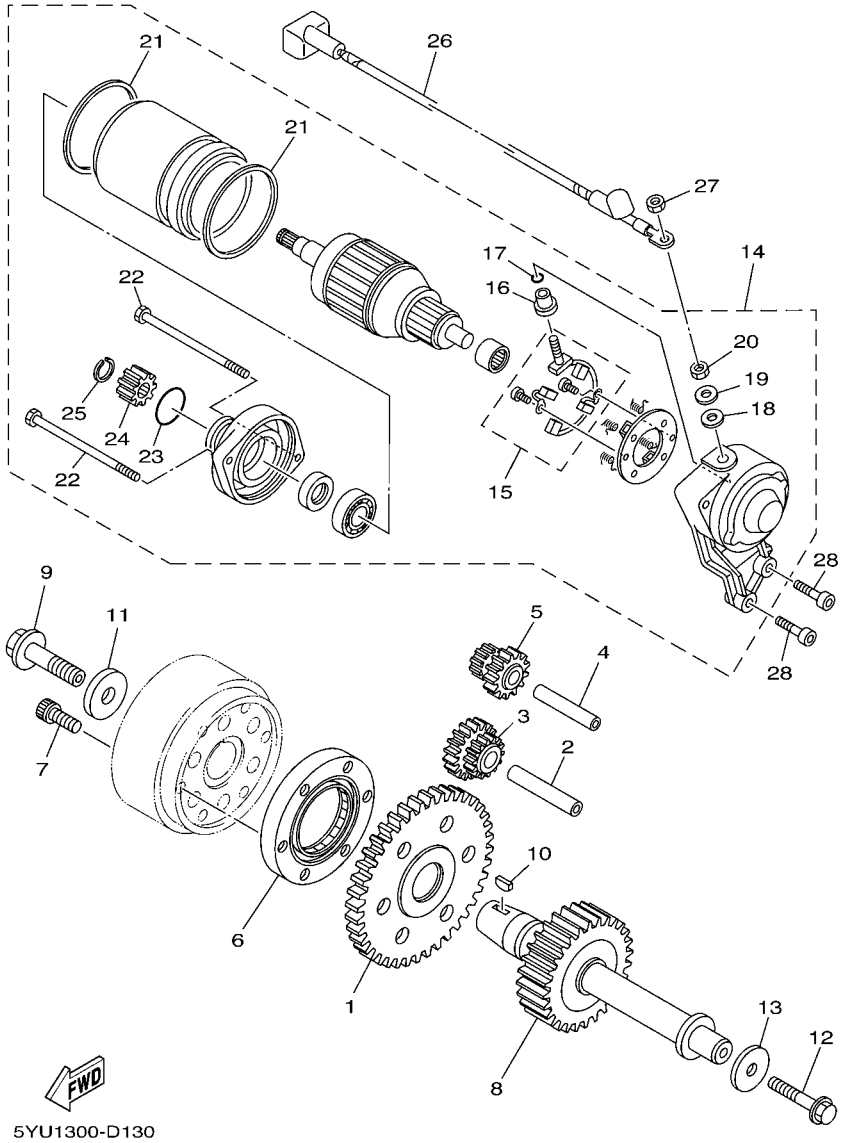

FIG. 13 STARTER

REF. NO.	PART NO.	DESCRIPTION	5YU8	5YUB				REMARKS
1	4WM–15515–00	GEAR 3	1	1				
2	4WM–15522–00	SHAFT 2	1	1				
3	4WM–15517–00	GEAR, IDLER 2	1	1				
4	4WM–15521–00	SHAFT 1	1	1				
5	4WM–15512–00	GEAR, IDLER 1	1	1				
6	4WM–15590–00	STARTER ONE-WAY ASSY	1	1				
7	90110–08015	BOLT, HEXAGON SOCKET HEAD	6	6				
8	5VN–15659–00	SHAFT	1	1				
9	90105–12005	BOLT, FLANGE	1	1				
10	90280–05048	KEY, WOODRUFF	1	1				
11	90201–12008	WASHER, PLATE	1	1				
12	95817–08045	BOLT, FLANGE	1	1				
13	4WM–15653–00	WASHER	1	1				
14	5PX–81890–01	MOTOR ASSY	1	1				
15	1D7–81801–00	.BRUSH SET	1	1				
16	5PX–8182G–00	.BUSH, TERMINAL	1	1				
17	93210–06001	.O-RING	1	1				
18	5PX–8181L–00	.WASHER, PLAIN	1	1				
19	1D7–81835–00	.WASHER	1	1				
20	95302–06700	.NUT	1	1				
21	5PX–81861–00	.GASKET	2	2				
22	5PX–81846–00	.SCREW	2	2				
23	93210–25711	.O-RING	1	1				
24	5PX–15511–00	.GEAR, STARTING MOTOR	1	1				
25	99009–10800	.CIRCLIP	1	1				
26	5YU–8183G–00	CORD COMP.	1	1				
27	95302–06700	NUT	1	1				

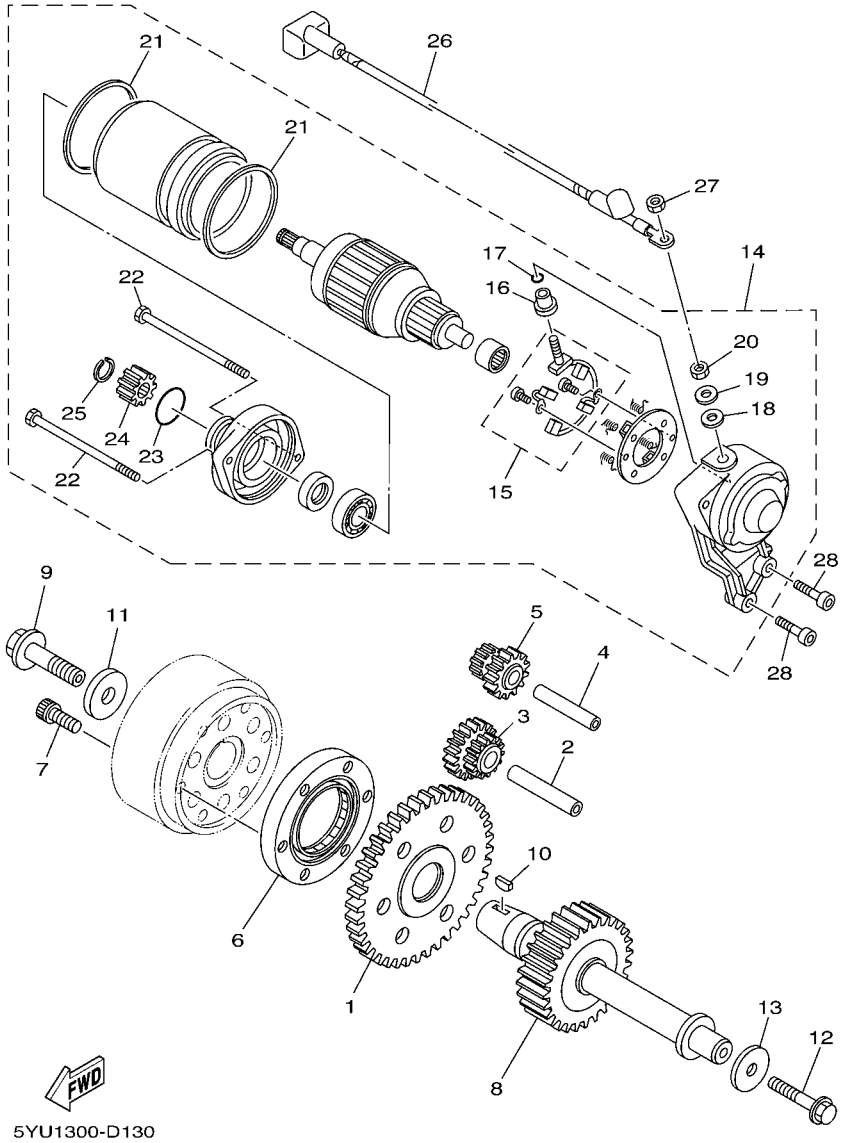

FIG. 13 STARTER

REF. NO.	PART NO.	DESCRIPTION	5YU8	5YUB				REMARKS
28	91314–06025	BOLT	2	2				

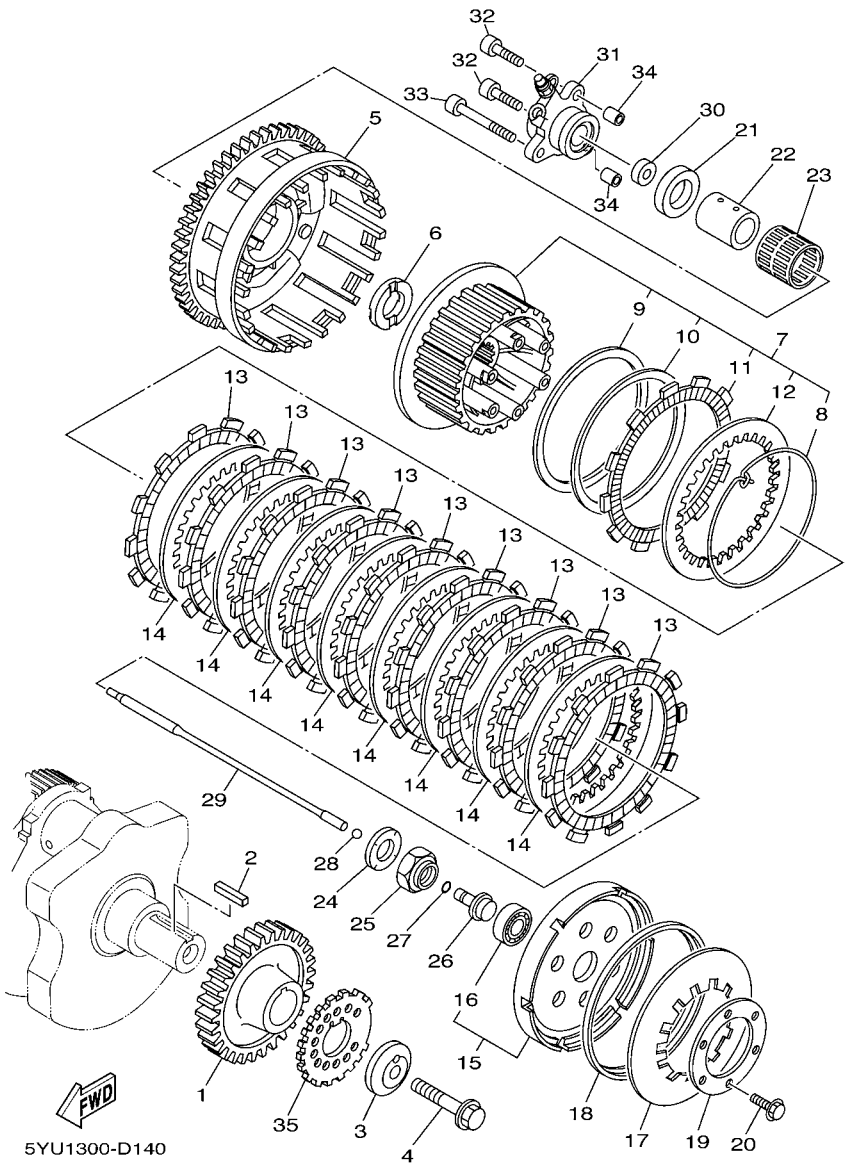

FIG. 14 CLUTCH

REF. NO.	PART NO.	DESCRIPTION	5YU8	5YUB				REMARKS
1	5YU–16111–00	GEAR, PRIMARY DRIVE	1	1				
2	4WM–16193–00	KEY, FEATHER	1	1				
3	4WM–16181–00	SPACER 1	1	1				
4	90101–12011	BOLT	1	1				
5	5YU–16150–00	PRIMARY DRIVEN GEAR COMP.	1	1				
6	5YU–16154–00	PLATE, THRUST 1	1	1				
7	5YU–16370–00	CLUTCH BOSS ASSY	1	1				
8	2H7–16385–00	.RING, CLUTCH BOSS	1	1				
9	36Y–16384–00	.PLATE, SEAT	1	1				
10	36Y–16383–00	.SPRING, CLUTCH BOSS	1	1				
11	4XV–16331–00	.PLATE, FRICTION 2	1	1				
12	2H7–16325–00	.PLATE, CLUTCH 2	1	1				
13	5YU–16321–00	PLATE, FRICTION	9	9				
14	2H7–16325–00	PLATE, CLUTCH 2	8	8				
15	5YU–16350–00	PRESSURE PLATE ASSY	1	1				
16	93306–00304	.BEARING	1	1				
17	5YU–16334–00	SPRING, CLUTCH 2	1	1				
18	36Y–16335–00	HOUSING, SPRING	1	1				
19	1TX–16352–00	PLATE, PRESSURE 2	1	1				
20	95817–06025	BOLT, FLANGE	6	6				
21	5YU–16164–00	PLATE, THRUST 2	1	1				
22	90387–26006	COLLAR	1	1				
23	93310–33559	BEARING	1	1				
24	90208–20001	WASHER, CONICAL SPRING	1	1				
25	90179–20007	NUT	1	1				
26	4KG–16356–00	ROD, PUSH 1	1	1				
27	93210–06632	O-RING	1	1				

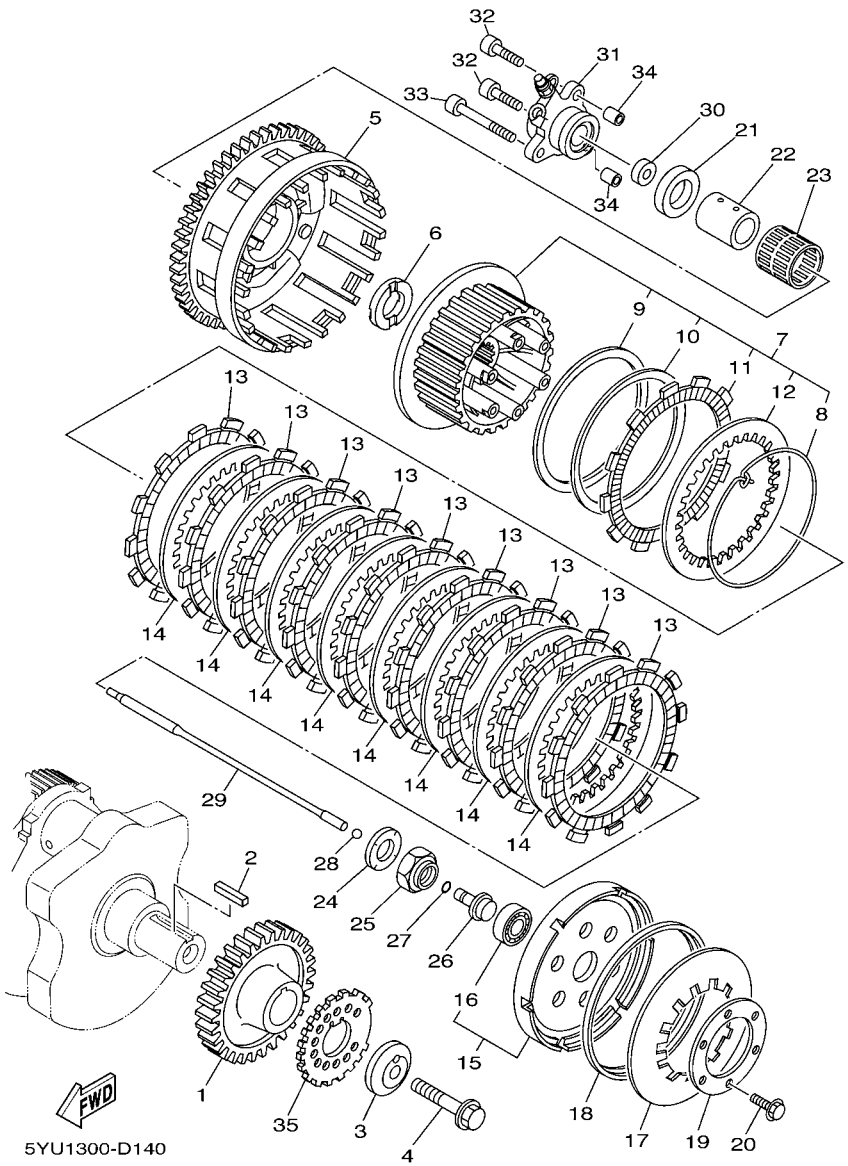

FIG. 14 CLUTCH

REF. NO.	PART NO.	DESCRIPTION	5YU8	5YUB				REMARKS
28	93511–32017	BALL	1	1				
29	5YU–16357–00	ROD, PUSH 2	1	1				
30	93109–08061	OIL SEAL	1	1				
31	5YU–16381–10	PUSH LEVER COMP.	1	1				
32	91314–06030	BOLT	2	2				
33	91314–06065	BOLT	1	1				
34	99530–08012	PIN, DOWEL	2	2				
35	5YU–81673–00	ROTOR	1	1				

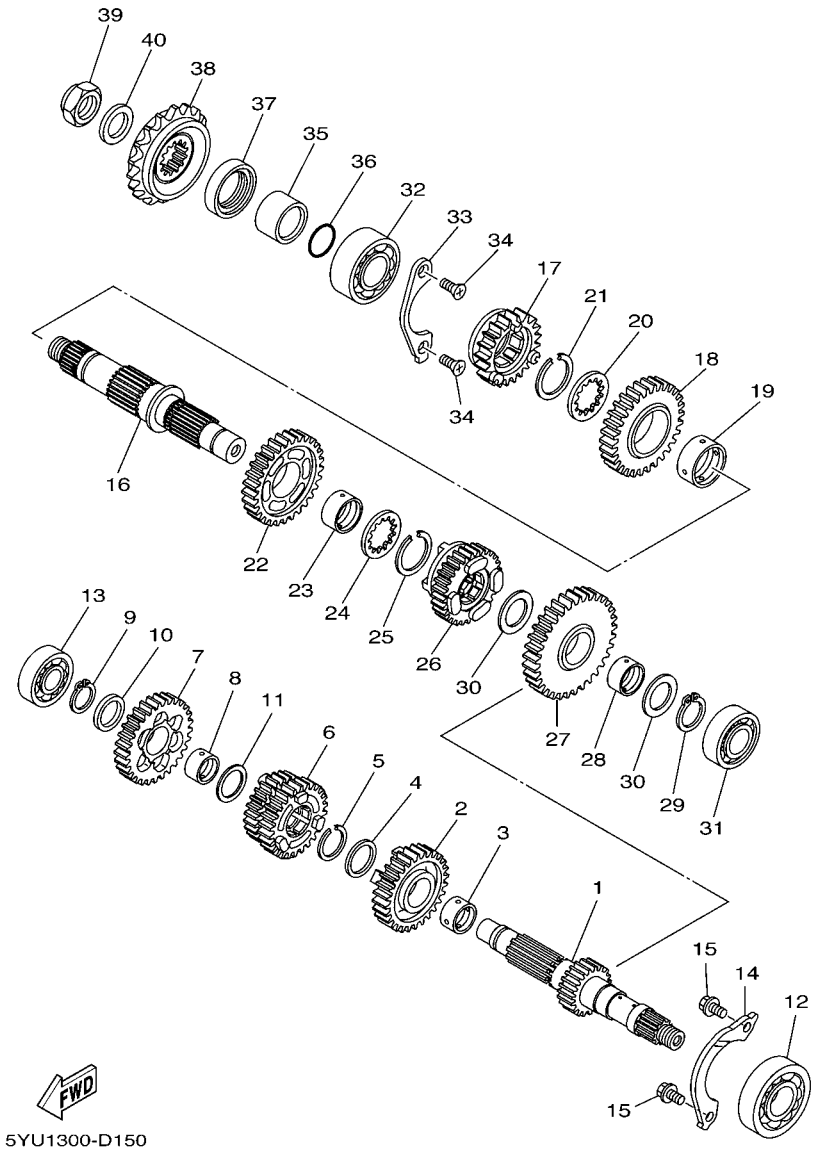

FIG. 15 TRANSMISSION

REF. NO.	PART NO.	DESCRIPTION	5YU8	5YUB				REMARKS
1	5YU–17411–00	AXLE, MAIN (16T)	1	1				
2	5YU–17141–00	GEAR, 4TH PINION (25T)	1	1				
3	90387–28010	COLLAR	1	1				
4	90209–25014	WASHER	1	1				
5	93440–28062	CIRCLIP	1	1				
6	5YU–17121–01	GEAR, 2ND PINION (19/25T)	1	1				
7	5YU–17151–00	GEAR, 5TH PINION (30T)	1	1				
8	90387–23003	COLLAR	1	1				
9	93410–23056	CIRCLIP	1	1				
10	90201–232K5	WASHER, PLATE	1	1				
11	90201–23014	WASHER, PLATE	1	1				
12	93306–37806	BEARING	1	1				
13	93306–30441	BEARING	1	1				
14	5YU–15381–00	PLATE, BEARING COVER	1	1				
15	90105–06020	BOLT, FLANGE	2	2				
16	5YU–17421–00	AXLE, DRIVE	1	1				
17	5YU–17251–00	GEAR, 5TH WHEEL (24T)	1	1				
18	5YU–17221–00	GEAR, 2ND WHEEL (30T)	1	1				
19	90387–350R5	COLLAR	1	1				
20	90209–33008	WASHER	1	1				
21	93440–34025	CIRCLIP	1	1				
22	5YU–17231–00	GEAR, 3RD WHEEL (29T)	1	1				
23	90387–31003	COLLAR	1	1				
24	90209–28008	WASHER	1	1				
25	93440–31187	CIRCLIP	1	1				
26	5YU–17241–00	GEAR, 4TH WHEEL (24T)	1	1				
27	5YU–17211–00	GEAR, 1ST WHEEL (38T)	1	1				

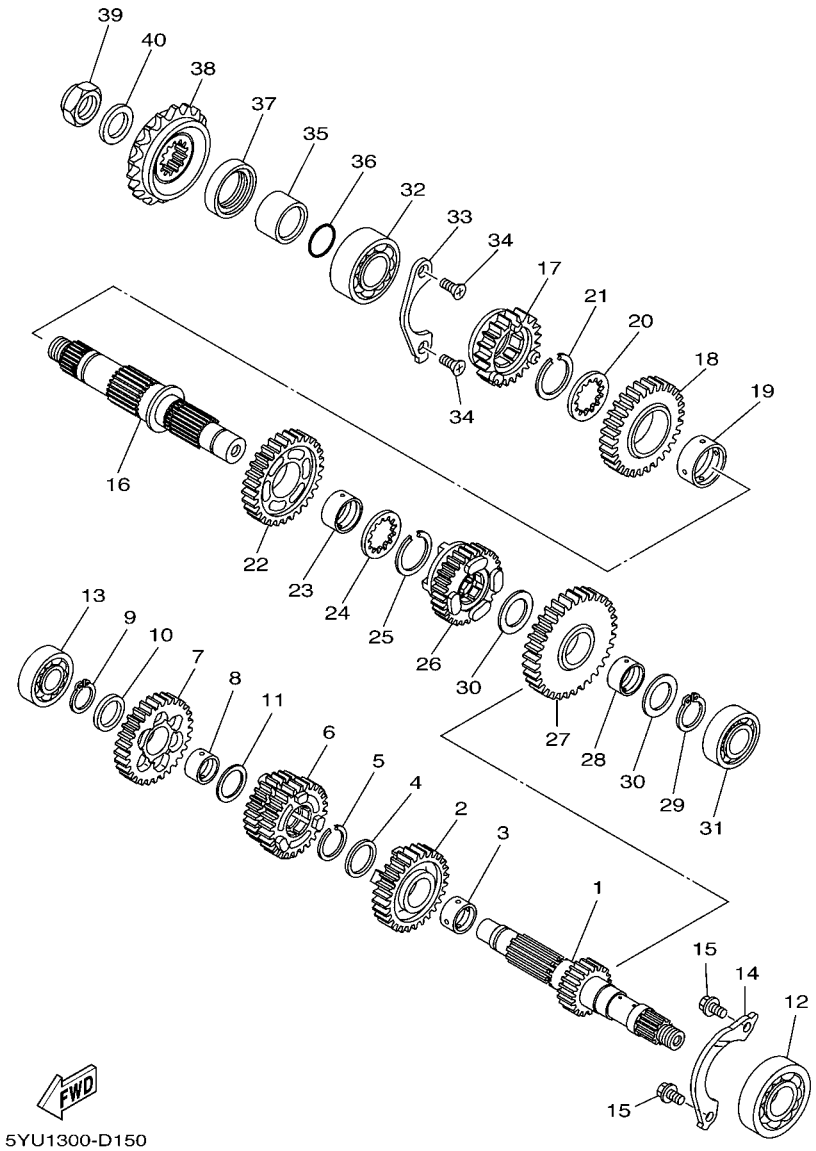

FIG. 15 TRANSMISSION

REF. NO.	PART NO.	DESCRIPTION	5YU8	5YUB				REMARKS
28	90387–25013	COLLAR	1	1				
29	93410–25017	CIRCLIP	1	1				
30	90201–25017	WASHER, PLATE	2	2				
31	93306–20550	BEARING	1	1				
32	93305–20607	BEARING	1	1				
33	5YU–15383–00	PLATE, BEARING COVER	1	1				
34	90151–06008	SCREW, COUNTERSUNK	2	2				
35	90387–30007	COLLAR	1	1				
36	93210–27672	O-RING	1	1				
37	93102–40022	OIL SEAL	1	1				
38	3CV–17460–00	SPROCKET,DRIVE (17T)	1	1				
39	90179–22006	NUT	1	1				
40	90208–22002	WASHER, CONICAL SPRING	1	1				

FIG. 16 SHIFT CAM & FORK

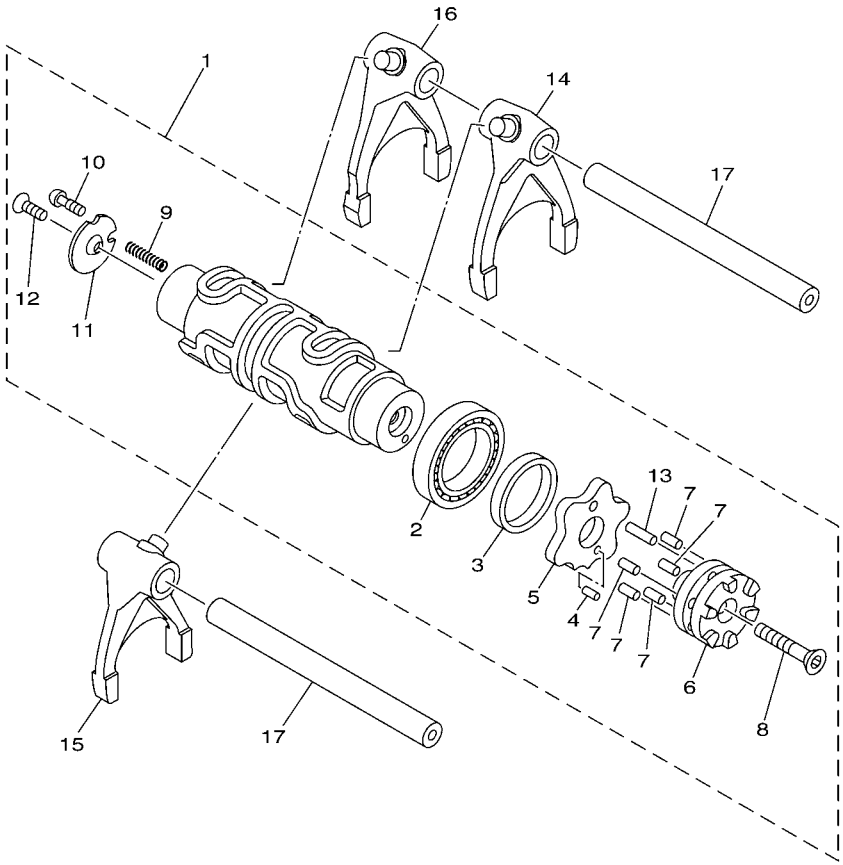

REF. NO.	PART NO.	DESCRIPTION	5YU8	5YUB				REMARKS
1	5PX–18540–00	SHIFT CAM ASSY	1	1				
2	93306–90602	.BEARING	1	1				
3	90560–30234	.SPACER	1	1				
4	93603–10049	.PIN, DOWEL	1	1				
5	4NK–18141–00	.PLATE, STOPPER	1	1				
6	4NK–18185–00	.SEGMENT	1	1				
7	93604–12037	.PIN, DOWEL	5	5				
8	90151–06013	.SCREW, COUNTERSUNK	1	1				
9	90501–06022	.SPRING, COMPRESSION	1	1				
10	4UN–18542–00	.POINT, NEUTRAL	1	1				
11	4UN–18566–00	.PLATE, SIDE 2	1	1				
12	90149–05011	.SCREW	1	1				
13	93604–16092	.PIN, DOWEL	1	1				
14	4WM–18511–00	FORK, SHIFT 1	1	1				
15	4WM–18512–00	FORK, SHIFT 2	1	1				
16	5PX–18513–00	FORK, SHIFT 3	1	1				
17	4NK–18531–00	BAR, SHIFT FORK GUIDE 1	2	2				

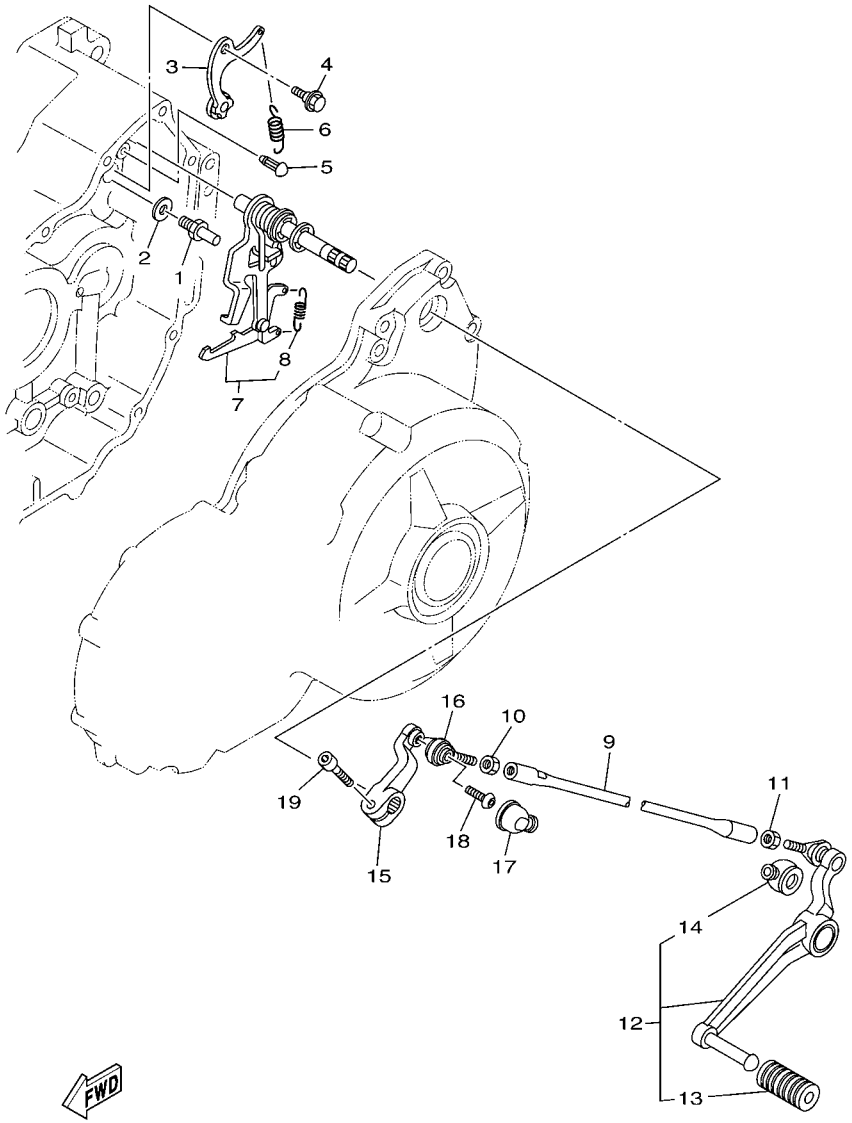

5YU1300-D170

FIG. 17 SHIFT SHAFT

REF. NO.	PART NO.	DESCRIPTION	5YU8	5YUB				REMARKS
1	90109–08049	BOLT	1	1				
2	90201–08085	WASHER, PLATE	1	1				
3	26H–18140–02	STOPPER LEVER ASSY	1	1				
4	90109–06048	BOLT	1	1				
5	132–16346–00	HOOK, SPRING	1	1				
6	90506–18007	SPRING, TENSION	1	1				
7	4WM–18101–01	SHIFT SHAFT ASSY	1	1				
8	90506–08227	.SPRING, TENSION	1	1				
9	5YU–18115–00	ROD, SHIFT	1	1				
10	95304–06700	NUT	1	1				
11	90170–06228	NUT(COUNTER CLOCKWISE)	1	1				
12	5YU–18110–00	SHIFT PEDAL ASSY	1	1				
13	5EB–18113–00	.COVER, SHIFT PEDAL	1	1				
14	4XV–18154–00	.COVER, DUST	1	1				
15	5YU–18112–00	ARM, SHIFT	1	1				
16	5LV–18116–00	JOINT, ROD 1	1	1				
17	4XV–18154–00	COVER, DUST	1	1				
18	90111–06019	BOLT,HEX. SOCKET BUTTON	1	1				
19	91314–06020	BOLT	1	1				

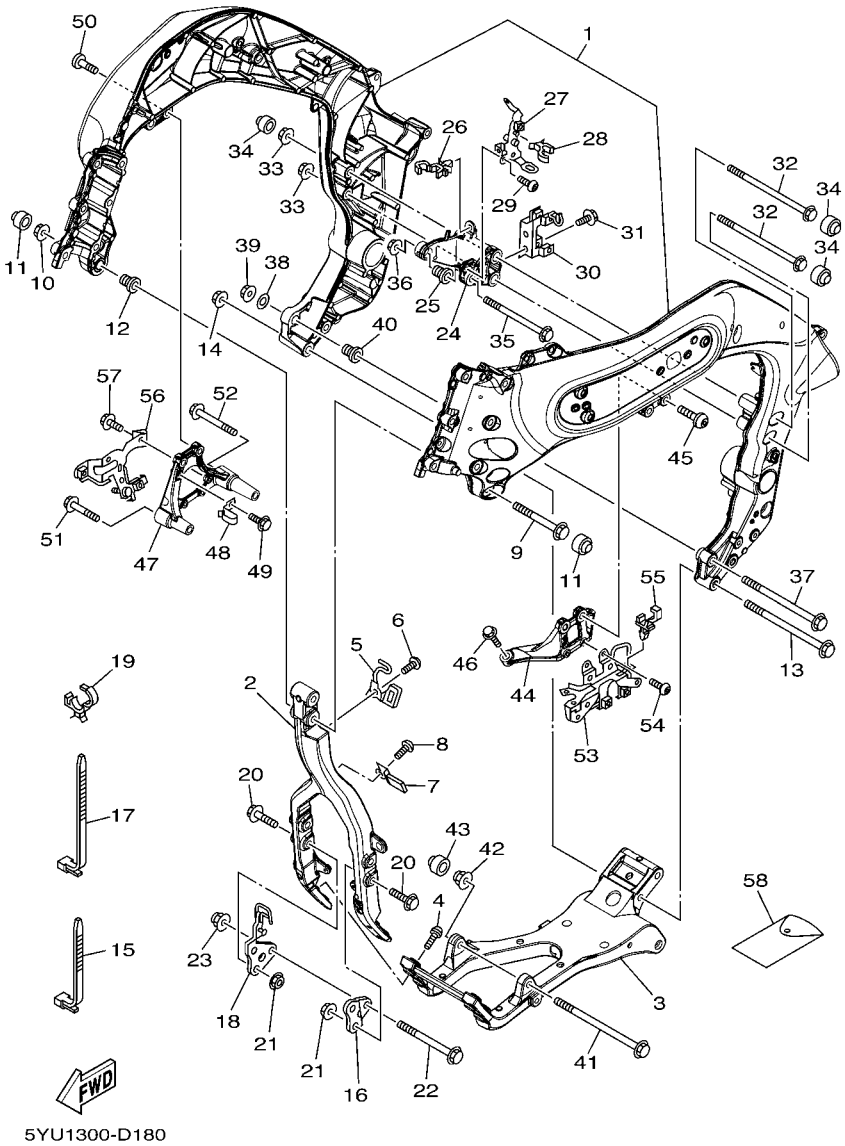

FIG. 18 FRAME

REF. NO.	PART NO.	DESCRIPTION	5YU8	5YUB				REMARKS
1	5YU–21110–40	FRAME COMP.	1	1				
2	5YU–21281–00	DOWNTUBE	1	1				
3	5YU–21191–00	DOWNTUBE	1	1				
4	90149–10024	SCREW	4	4				
5	5YU–21161–00	HOLDER, CABLE	1	1				
6	92017–06010	BOLT, BUTTON HEAD	1	1				
7	5YU–21163–00	HOLDER, CLUTCH CABLE	1	1				
8	90111–06003	BOLT,HEX. SOCKET BUTTON	1	1				
9	95814–12110	BOLT, FLANGE	2	2				
10	95604–12200	NUT, SELF-LOCKING	2	2				
11	5YU–21399–00	CAP	4	4				
12	5YU–21495–00	BOLT, ENGINE ADJUSTING	2	2				
13	90105–10120	BOLT, FLANGE	2	2				
14	90185–10002	NUT, SELF-LOCKING	2	2				
15	90464–15195	CLAMP	2	2				
16	5YU–21314–00	STAY, ENGINE 5	1	1				
17	90464–13077	CLAMP	1	1				
18	5YU–21315–00	STAY, ENGINE 2	1	1				
19	90464–25217	CLAMP	1	1				
20	90105–10024	BOLT, FLANGE	4	4				
21	90179–10015	NUT	4	4				
22	90105–12016	BOLT, FLANGE	1	1				
23	90185–12002	NUT, SELF-LOCKING	1	1				
24	5YU–21316–00	STAY, ENGINE 3	1	1				
25	5YU–21495–00	BOLT, ENGINE ADJUSTING	1	1				
26	90464–20009	CLAMP	1	1				
27	5YU–2137F–00	STAY 1	1	1				

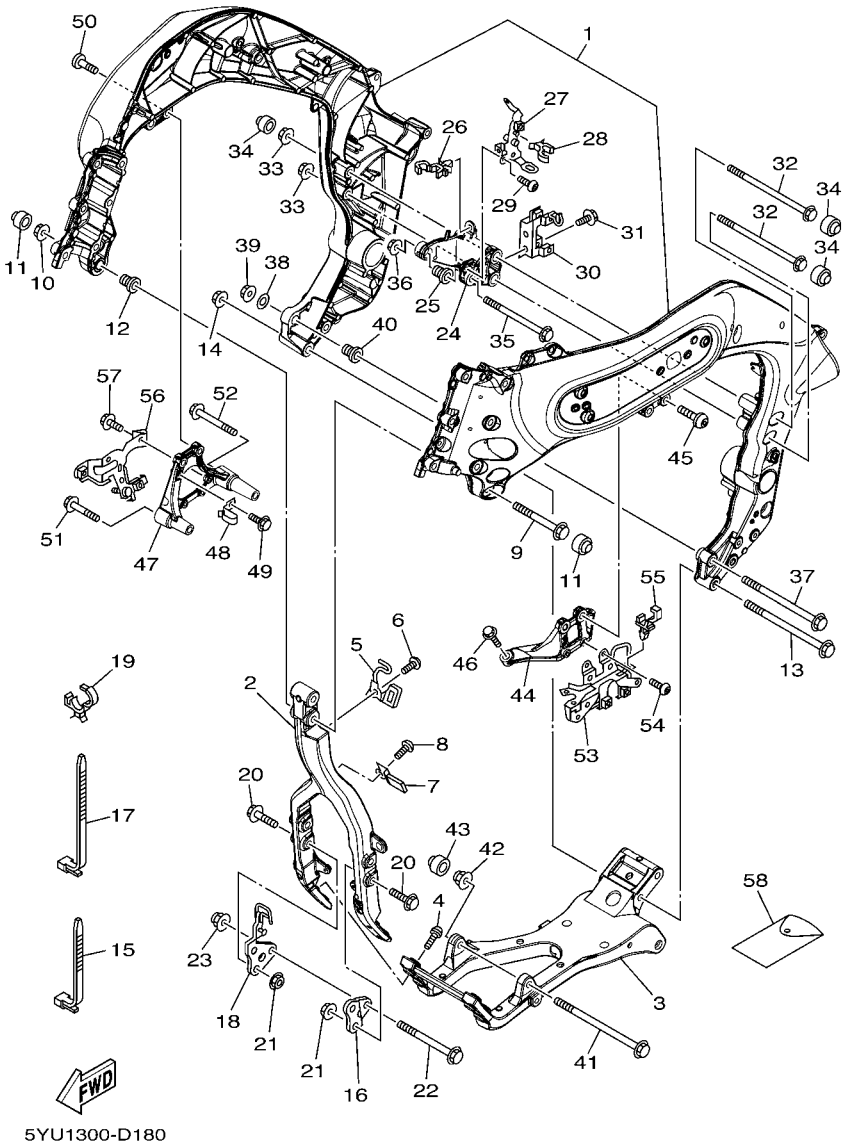

FIG. 18 FRAME

REF. NO.	PART NO.	DESCRIPTION	5YU8	5YUB				REMARKS
28	90464–15192	CLAMP	1	1				
29	92017–06012	BOLT, BUTTON HEAD	2	2				
30	5YU–21359–00	BRACKET, COIL	1	1				
31	95027–06012	BOLT, FLANGE	2	2				
32	95814–10190	BOLT, FLANGE	2	2				
33	95604–10200	NUT, SELF-LOCKING	2	2				
34	5YU–2143A–00	CAP	3	3				
35	90105–12016	BOLT, FLANGE	1	1				
36	90185–12002	NUT, SELF-LOCKING	1	1				
37	90105–12014	BOLT, FLANGE	1	1				
38	90201–120A5	WASHER, PLATE	1	1				
39	90185–12002	NUT, SELF-LOCKING	1	1				
40	5YU–21495–00	BOLT, ENGINE ADJUSTING	1	1				
41	90105–12026	BOLT, FLANGE	1	1				
42	90185–12002	NUT, SELF-LOCKING	1	1				
43	5YU–21399–00	CAP	1	1				
44	5YU–21317–00	STAY, ENGINE 3	1	1				
45	90109–10014	BOLT	2	2				
46	95827–10030	BOLT, FLANGE	2	2				
47	5YU–21319–00	STAY, ENGINE 6	1	1				
48	90465–08382	CLAMP	1	1				
49	95027–06010	BOLT, FLANGE	1	1				
50	90109–10014	BOLT	2	2				
51	95817–10065	BOLT, FLANGE	1	1				
52	95817–10080	BOLT, FLANGE	1	1				
53	5YU–21321–00	STAY, SIDE COVER 1	1	1				
54	90111–06062	BOLT,HEX. SOCKET BUTTON	2	2				

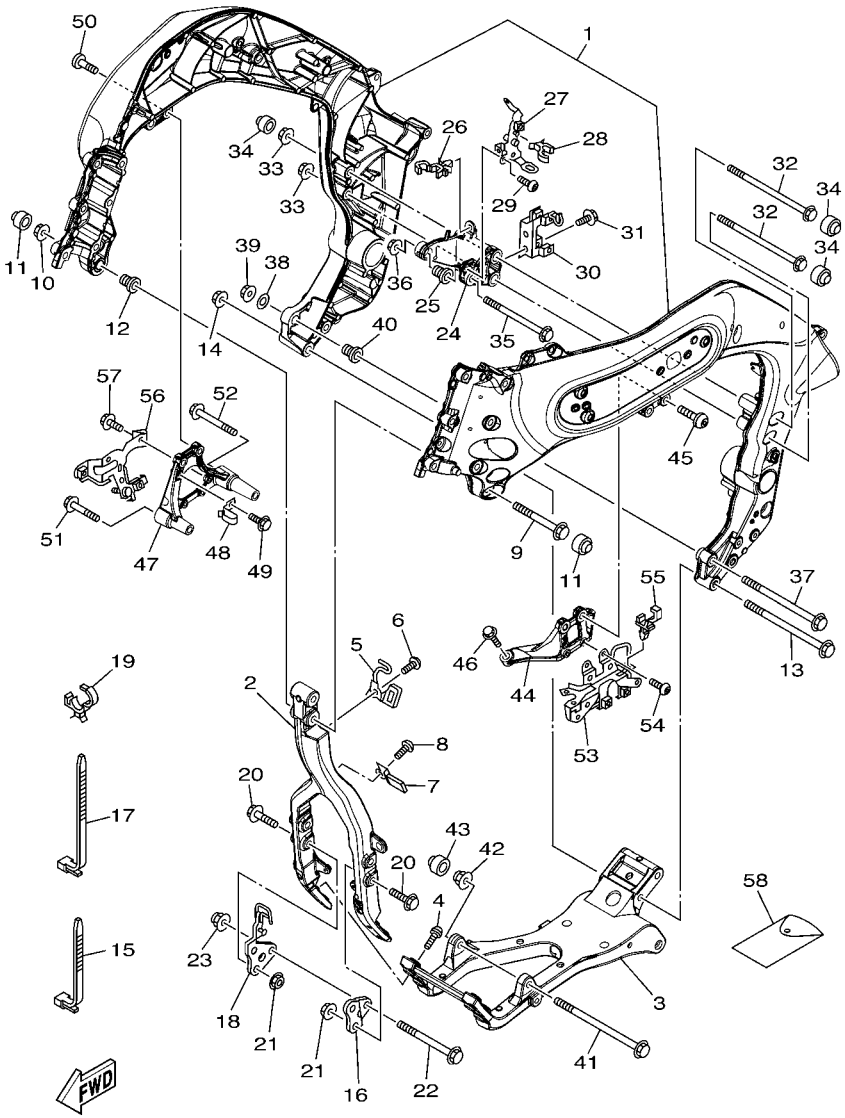

5YU1300-D180

FIG. 18 FRAME

REF. NO.	PART NO.	DESCRIPTION	5YU8	5YUB				REMARKS
55	90464–12M58	CLAMP	1	1				
56	5YU–21322–00	STAY, SIDE COVER 2	1	1				
57	95027–06012	BOLT, FLANGE	2	2				
58	5YU–28100–00	TOOL KIT	1	1				

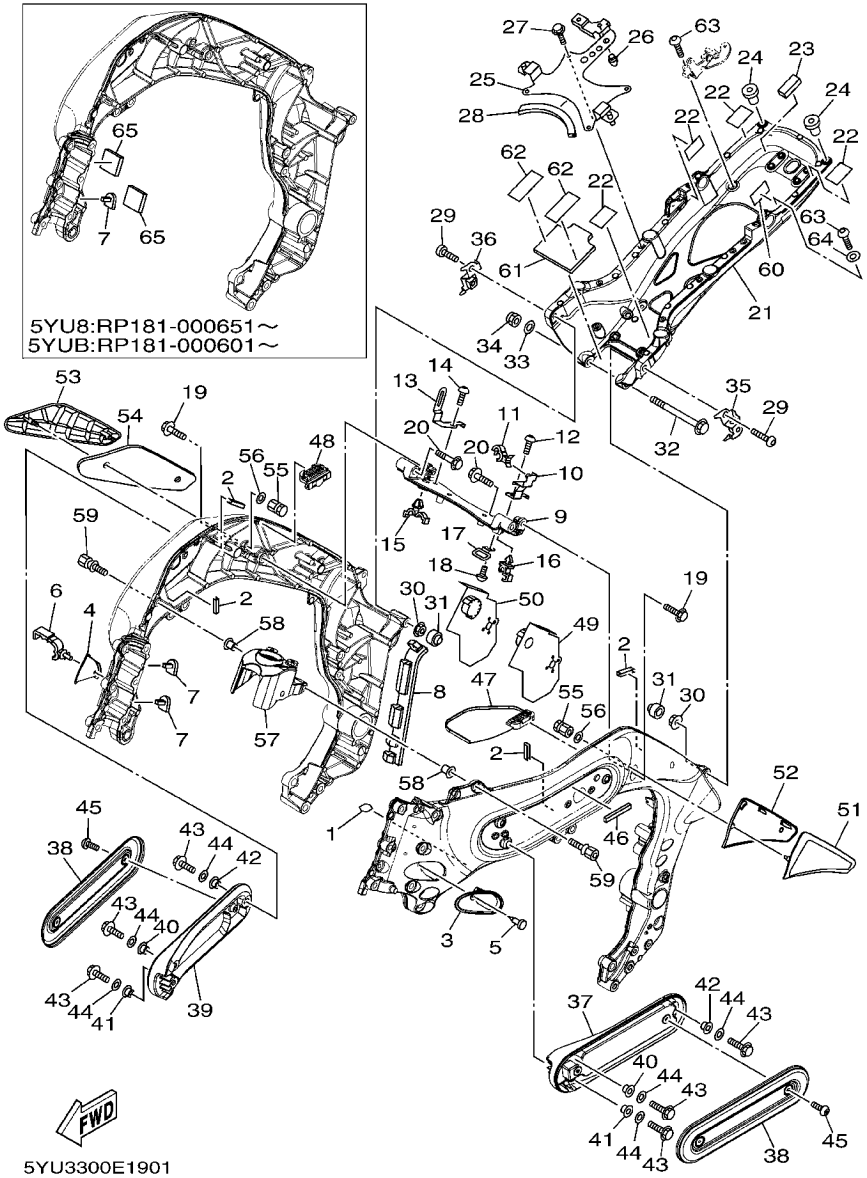

FIG. 19 FRAME 2

REF. NO.	PART NO.	DESCRIPTION	5YU8	5YUB				REMARKS
1	5VY–21268–00	SEAL	1	1				
2	3VD–24188–00	MOLD, FUEL TANK	4	4				
3	5YU–2117F–00	COVER	1	1				
4	5YU–2117M–00	COVER 2	1	1				
5	90269–06003	RIVET	1	1				
6	90464–07010	CLAMP	1	1				
7	5VX–21289–00	PLUG, BLIND	2	2				
	5VX–21289–00	PLUG, BLIND	1	1				5YU8:RP181-000651- 5YUB:RP181-000601-
8	5YU–28345–00	MOLE 1	1	1				
9	5YU–21196–00	CROSS TUBE,1	1	1				
10	5YU–2116A–00	STAY 1	1	1				
11	90464–08189	CLAMP	1	1				
12	90110–06007	BOLT, HEXAGON SOCKET HEAD	1	1				
13	5YU–2116E–00	COVER 2	1	1				
14	90110–06007	BOLT, HEXAGON SOCKET HEAD	1	1				
15	90464–18002	CLAMP	1	1				
16	90464–12M58	CLAMP	1	1				
17	5YU–21162–00	HOLDER, CLUTCH CABLE	1	1				
18	90149–06233	SCREW	1	1				
19	95817–10035	BOLT, FLANGE	2	2				
20	95817–10055	BOLT, FLANGE	2	2				
21	5YU–21190–00	REAR FRAME COMP.	1	1				
22	5PX–21268–00	SEAL	4	4				
23	3BN–21639–00	DAMPER 2	1	1				
24	90179–05003	NUT	2	2				
25	5YU–21183–01	PLATE	1	1				
26	5A8–21639–00	DAMPER 2	1	1				
27	90105–06639	BOLT, FLANGE	4	4				

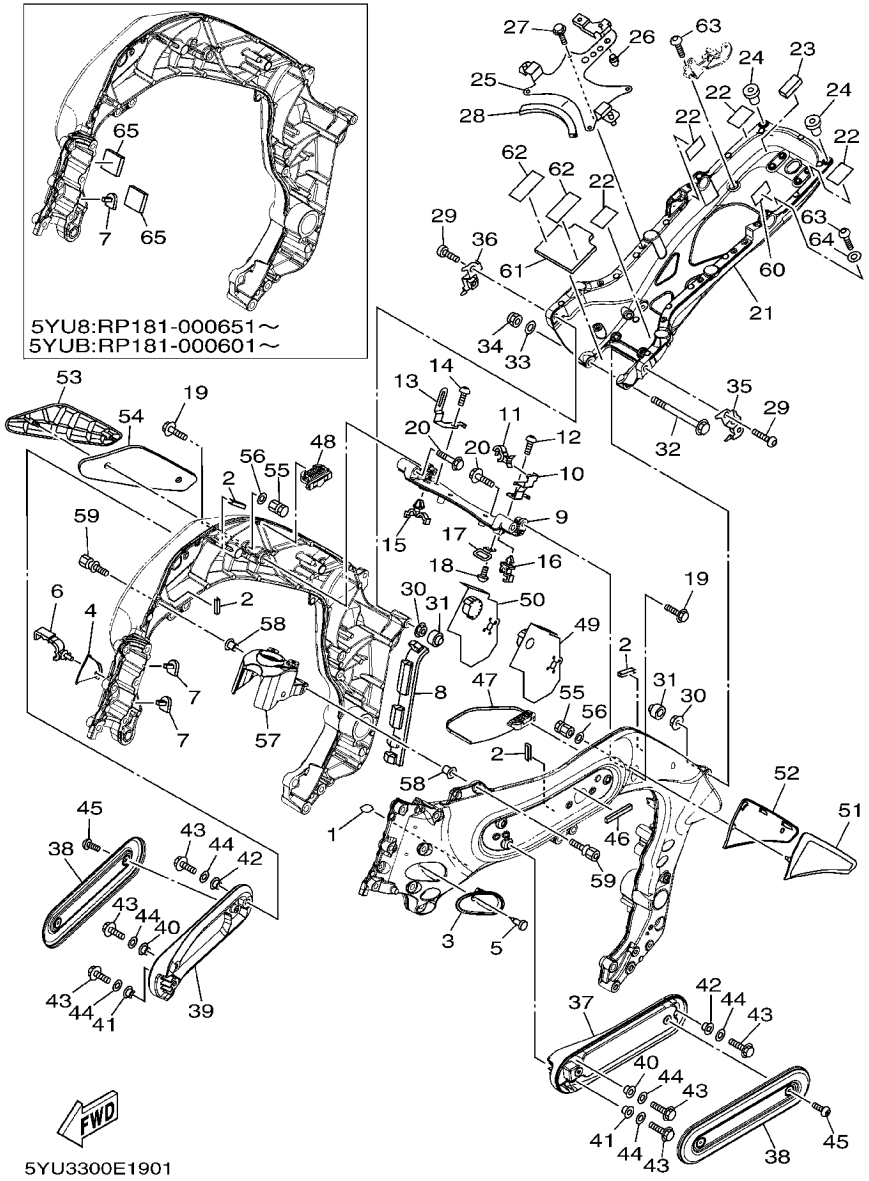

FIG. 19 FRAME 2

REF. NO.	PART NO.	DESCRIPTION	5YU8	5YUB				REMARKS
28	1HX–24188–01	MOLD, FUEL TANK	1	1				
29	90149–10006	SCREW	2	2				
30	95607–10200	NUT, U FLANGE	2	2				
31	5YU–2143A–00	CAP	2	2				
32	90105–12035	BOLT, FLANGE	1	1				
33	90201–12026	WASHER, PLATE	1	1				
34	95614–12100	NUT, U	1	1				
35	5YU–21151–00	BRACKET, REAR FENDER 1	1	1				
36	5YU–21152–00	BRACKET, REAR FENDER 2	1	1				
37	5YU–2836K–20	PANEL, INNER 1	1					UR FOR SMX
	5YU–2836K–00	PANEL, INNER 1	1	1				UR FOR BWC1,DRMK
38	5YU–2835U–10	PANEL 1	2					UR FOR SMX
	5YU–2835U–00	PANEL 1	2	2				UR FOR BWC1,DRMK
39	5YU–2836L–20	PANEL, INNER 2	1					UR FOR SMX
	5YU–2836L–00	PANEL, INNER 2	1	1				UR FOR BWC1,DRMK
40	90387–06071	COLLAR	2	2				
41	90387–065T2	COLLAR	2	2				
42	5YU–28373–00	COLLAR	2	2				
43	90149–06113	SCREW	6	6				
44	90201–06055	WASHER, PLATE	6	6				
45	90110–05201	BOLT, HEXAGON SOCKET HEAD	4	4				
46	5YU–2139X–00	DAMPER	1	1				
47	5YU–24181–00	DAMPER, LOCATING 1	1	1				
48	5YU–24182–00	DAMPER, LOCATING 2	1	1				
49	5YU–24183–00	DAMPER, LOCATING 3	1	1				
50	5YU–24184–00	DAMPER, LOCATING 4	1	1				
51	5YU–24129–00	COVER, SIDE 1	1	1				

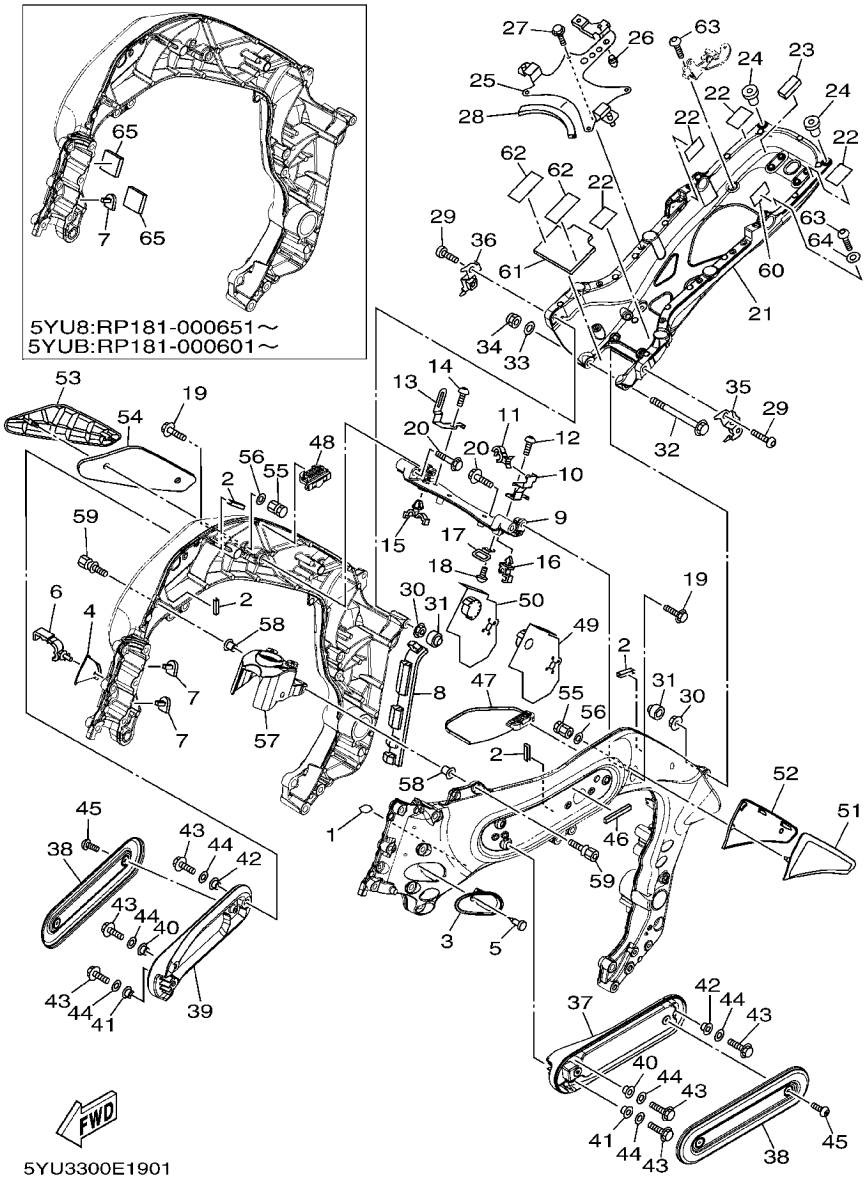

FIG. 19 FRAME 2

REF. NO.	PART NO.	DESCRIPTION	5YU8	5YUB				REMARKS
52	5YU–2117X–00	COVER 9	1	1				
53	5YU–24139–00	COVER, SIDE 2	1	1				
54	5YU–2117Y–00	COVER 10	1	1				
55	90179–05434	NUT	4	4				
56	92907–05200	WASHER	4	4				
57	5YU–2117A–00	STAY	1	1				
58	5YU–21116–00	COLLAR	2	2				
59	90109–080G5	BOLT	4	4				
60	5VY–21668–00	LABEL, TIRE	1	1				
61	5YU–2162G–00	PLATE 1	1	1				
62	5YU–21669–00	SEAL	2	2				
63	92017–06020	BOLT, BUTTON HEAD	2	2				
64	90201–06050	WASHER, PLATE	1	1				
65	4GY-23426–00	DAMPER	1	1				5YU8:RP181-000651- 5YUB:RP181-000601-

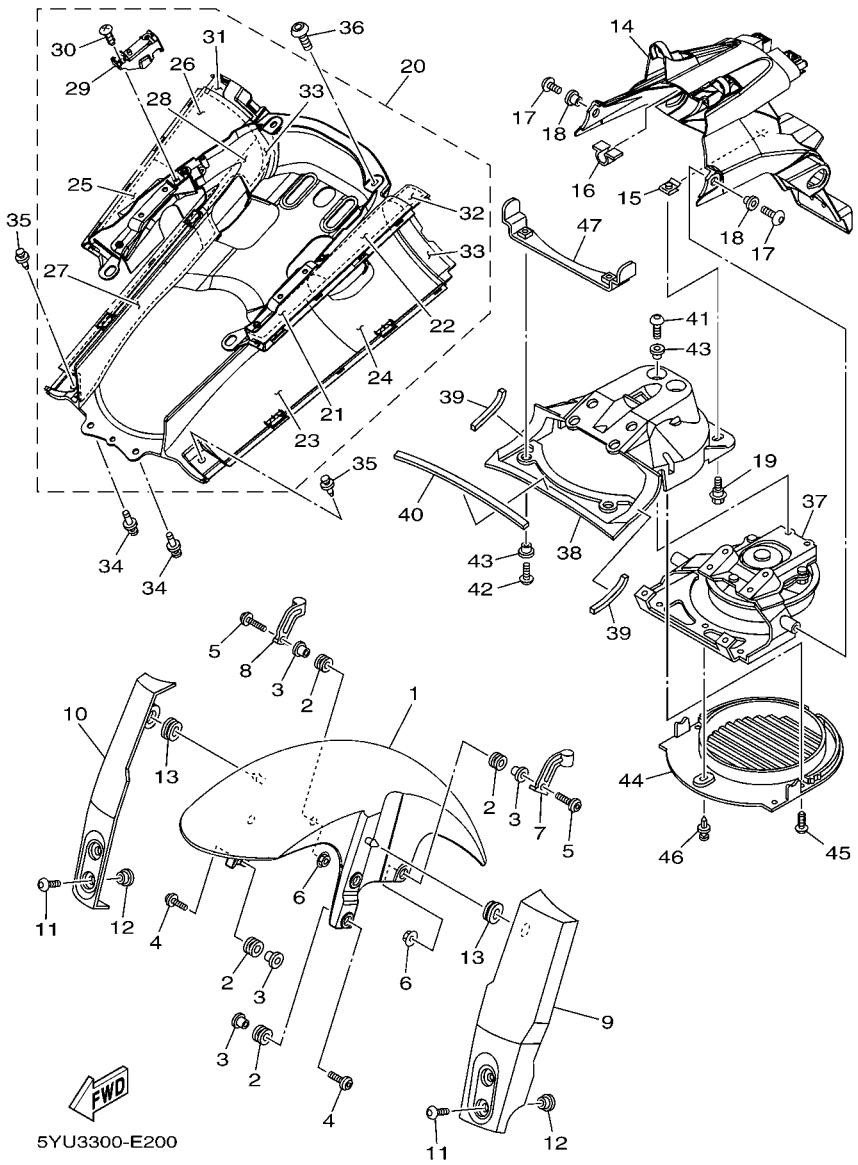

FIG. 20 FENDER

REF. NO.	PART NO.	DESCRIPTION	5YU8	5YUB				REMARKS
1	5YU–21511–00–P3	FENDER, FRONT	1					UR FOR SMX
	5YU–21511–00–P4	FENDER, FRONT	1					UR FOR BWC1
	5YU–21511–00–P5	FENDER, FRONT		1				UR FOR DRMK
2	90480–12314	GROMMET	6	6				
3	90387–065J6	COLLAR	6	6				
4	90111–06043	BOLT,HEX. SOCKET BUTTON	4	4				
5	90111–06030	BOLT,HEX. SOCKET BUTTON	2	2				
6	95707–06500	NUT, FLANGE	2	2				
7	5YU–25875–00	HOLDER, BRAKE HOSE 1	1	1				
8	5YU–25876–00	HOLDER, BRAKE HOSE 2	1	1				
9	5YU–23123–10–P0	COVER, LOWER 1	1					MBL2 FOR SMX
	5YU–23123–10–P1	COVER, LOWER 1	1	1				S8 FOR BWC1,DRMK
10	5YU–23133–10–P0	COVER, LOWER 2	1					MBL2 FOR SMX
	5YU–23133–10–P1	COVER, LOWER 2	1	1				S8 FOR BWC1,DRMK
11	90110–06200	BOLT, HEXAGON SOCKET HEAD	4	4				
12	90387–065T2	COLLAR	4	4				
13	90480–01559	GROMMET	2	2				
14	5YU–21629–00	GUARD, MUD	1	1				
15	90183–06053	NUT, SPRING	2	2				
16	5YU–8454J–00	CLAMP, CORD	1	1				
17	90111–06074	BOLT,HEX. SOCKET BUTTON	2	2				
18	90387–06648	COLLAR	2	2				
19	90109–06085	BOLT	2	2				
20	5YU–21600–00–98	REAR FENDER ASSY.	1	1				LGB
21	5YU–2173P–00	.SEAT	1	1				
22	5YU–2175P–00	.SEAT 4	1	1				
23	5YU–2848H–00	.SEAT	1	1				

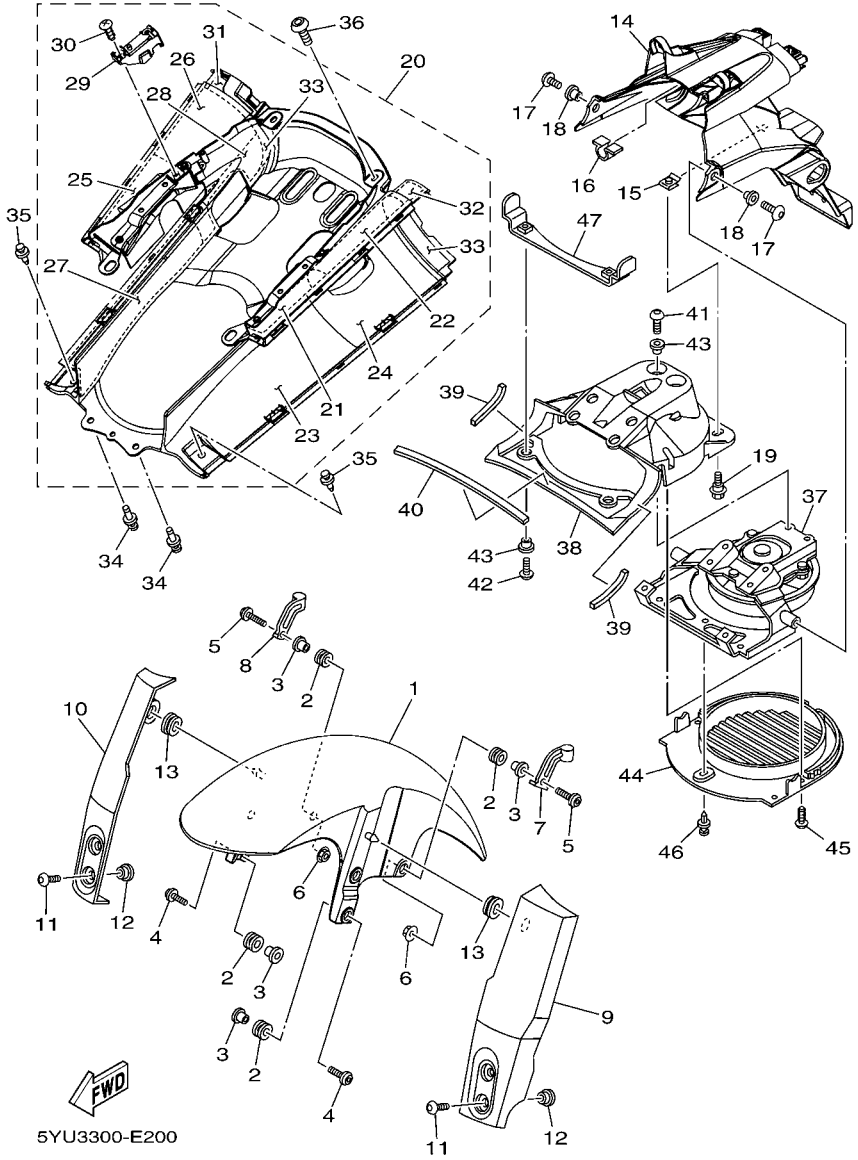

FIG. 20 FENDER

REF. NO.	PART NO.	DESCRIPTION	5YU8	5YUB				REMARKS
24	5YU–2848R–00	.SEAT 7	1	1				
25	5YU–2172P–00	.SEAT	1	1				
26	5YU–2174P–00	.SEAT 3	1	1				
27	5YU–2848K–00	.SEAT 2	1	1				
28	5YU–2848P–00	.SEAT 6	1	1				
29	5YU–85790–00	.THERMOSENSOR ASSY	1	1				
30	97707–40012	.SCREW, TAPPING	2	2				
31	5YU–28415–00	.DAMPER 1	1	1				
32	5YU–28416–00	.DAMPER 2	1	1				
33	5YU–21649–00	.DAMPER	2	2				
34	90269–07076	RIVET	2	2				
35	90269–07012	RIVET	2	2				
36	90111–05014	BOLT,HEX. SOCKET BUTTON	2	2				
37	5YU–12405–00	BLOWER ASSY	1	1				
38	5YU–2172A–00	PANEL 1	1	1				
39	5YU–2177M–00	DAMPER, LOCATING 3	2	2				
40	5YU–2177N–00	DAMPER, LOCATING 4	1	1				
41	92017–06016	BOLT, BUTTON HEAD	2	2				
42	90111–06019	BOLT,HEX. SOCKET BUTTON	2	2				
43	90387–07717	COLLAR	4	4				
44	5YU–2172F–00	PANEL 2	1	1				
45	97707–50012	SCREW, TRUSS HEAD TAPPING	3	3				
46	90269–06081	RIVET	1	1				
47	5YU–2172R–00	BRACKET 5	1	1				

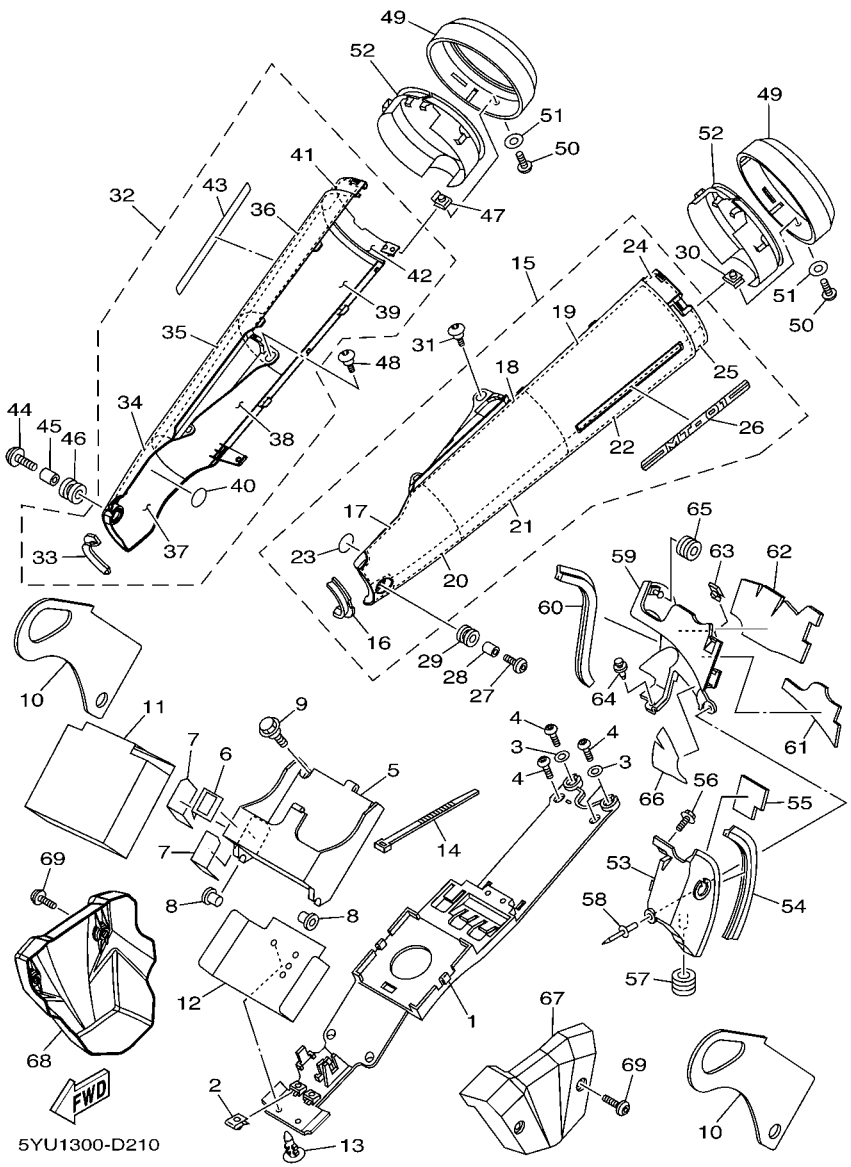

FIG. 21 SIDE COVER

REF. NO.	PART NO.	DESCRIPTION	5YU8	5YUB				REMARKS
1	5YU–8212B–00	BOX, BATTERY 1	1	1				
2	90183–04039	NUT, SPRING	2	2				
3	90201–06380	WASHER, PLATE	3	3				
4	92017–06025	BOLT, BUTTON HEAD	4	4				
5	5YU–8212C–00	BOX, BATTERY 2	1	1				
6	5YU–82559–00	HOOK	1	1				
7	5YU–21669–00	SEAL	2	2				
8	5YU–82176–00	DAMPER	2	2				
9	90109–063F1	BOLT	2	2				
10	5YU–82121–00	PAD, BATTERY	2	2				
11	5YU–82122–00	SEAT, BATTERY	1	1				
12	5YU–82123–00	SEAT, BATTERY	1	1				
13	90269–07064	RIVET	2	2				
14	1UA–82591–00	BAND	2	2				
15	5YU–Y2171–00–98	COVER, SIDE 1	1	1				LGB
16	5YU–21717–00	.DAMPER	1	1				
17	5YU–28372–00	.DAMPER	1	1				
18	5YU–28455–00	.DAMPER, 4	1	1				
19	5YU–2847S–00	.DAMPER 11	1	1				
20	5YU–28227–00	.DAMPER 2	1	1				
21	5YU–28247–00	.DAMPER 4	1	1				
22	5YU–2847R–00	.DAMPER 10	1	1				
23	5YU–2811F–00	.PATCH,SHEET	6	6				
24	5YU–2836T–00	.DAMPER, LOCATING 1	1	1				
25	5YU–21649–00	.DAMPER	1	1				
26	5YU–2173B–00	.EMBLEM 3D	1	1				
27	90149–06302	SCREW	1	1				

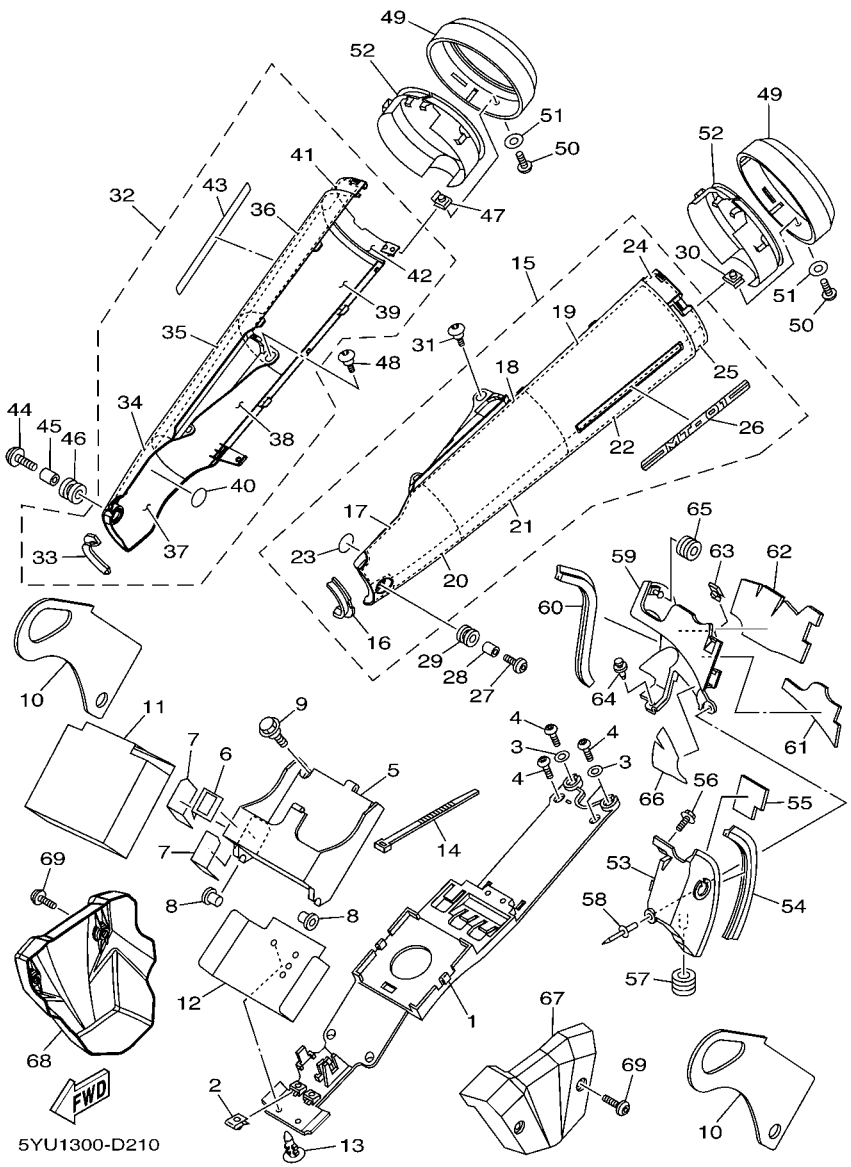

FIG. 21 SIDE COVER

REF. NO.	PART NO.	DESCRIPTION	5YU8	5YUB				REMARKS
28	90387–062R8	COLLAR	1	1				
29	90480–12596	GROMMET	1	1				
30	90183–05076	NUT, SPRING	1	1				
31	90109–06061	BOLT	1	1				
32	5YU–Y2172–00–98	COVER, SIDE 2	1	1				LGB
33	5YU–21717–00	.DAMPER	1	1				
34	5YU–28371–00	.DAMPER	1	1				
35	5YU–28435–00	.DAMPER 4	1	1				
36	5YU–2847R–00	.DAMPER 10	1	1				
37	5YU–28217–00	.DAMPER 1	1	1				
38	5YU–28237–00	.DAMPER 3	1	1				
39	5YU–2847S–00	.DAMPER 11	1	1				
40	5YU–2811F–00	.PATCH,SHEET	6	6				
41	5YU–2836U–00	.DAMPER, LOCATING 2	1	1				
42	5YU–21649–00	.DAMPER	1	1				
43	5YU–2173B–00	.EMBLEM 3D	1	1				
44	90149–06302	SCREW	1	1				
45	90387–062R8	COLLAR	1	1				
46	90480–12596	GROMMET	1	1				
47	90183–05076	NUT, SPRING	1	1				
48	90109–06061	BOLT	1	1				
49	5YU–14787–02	CAP, SILENCER	2	2				
50	90110–05215	BOLT, HEXAGON SOCKET HEAD	2	2				
51	90202–05180	WASHER, PLATE	2	2				
52	5YU–21718–00	RING, STOP	2	2				
53	5YU–21731–00	COVER, SIDE 3	1	1				
54	5YU–2171L–00	MOLE, SIDE COVER 1	1	1				

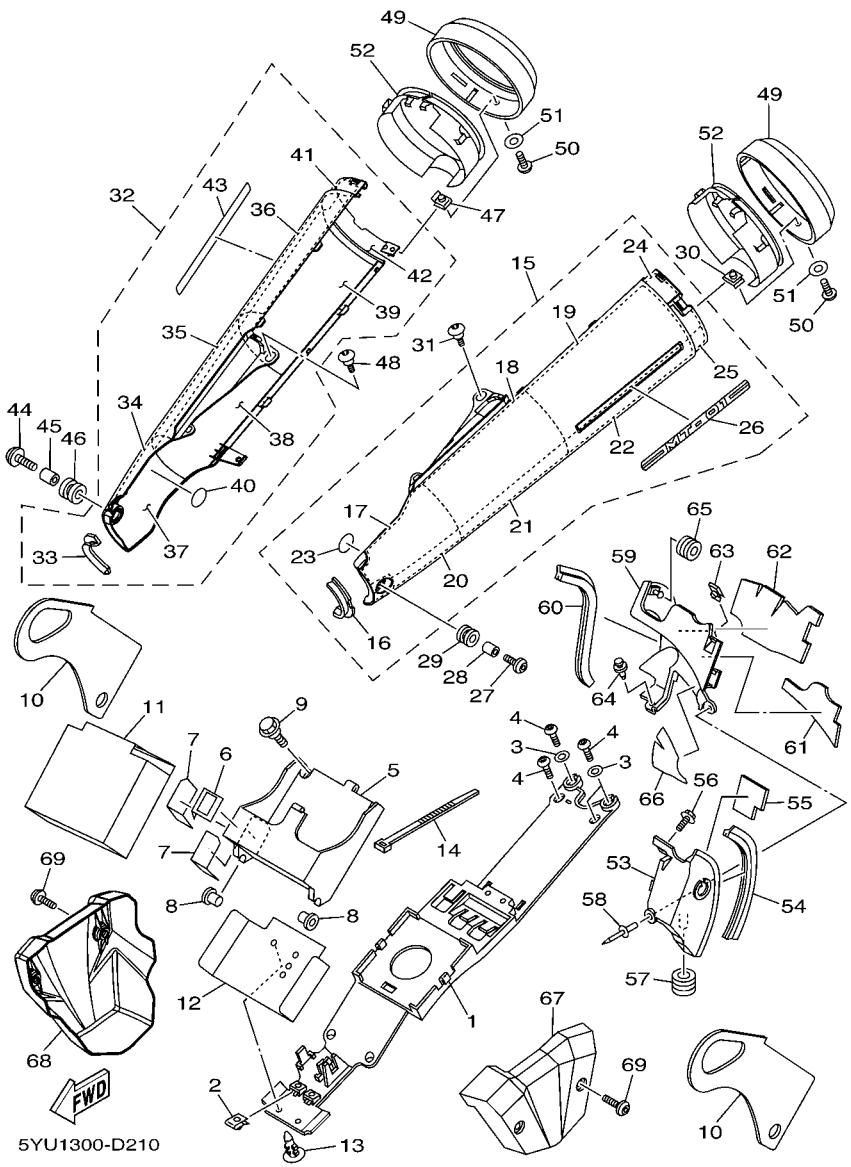

FIG. 21 SIDE COVER

REF. NO.	PART NO.	DESCRIPTION	5YU8	5YUB				REMARKS
55	5YU–2834E–00	DAMPER 3	1	1				
56	90109–05007	BOLT	1	1				
57	90480–01558	GROMMET	1	1				
58	90269–05073	RIVET	1	1				
59	5YU–21741–00	COVER, SIDE 4	1	1				
60	5YU–2171M–00	MOLE, SIDE COVER 2	1	1				
61	5YU–2834F–00	DAMPER	1	1				
62	5YU–2837J–00	DAMPER 5	1	1				
63	90183–05076	NUT, SPRING	1	1				
64	90269–06012	RIVET	1	1				
65	90480–12320	GROMMET	1	1				
66	5YU–2837K–00	DAMPER 6	1	1				
67	5YU–2171X–00	COVER, SIDE 6	1	1				
68	5YU–2171E–00	COVER, SIDE 5	1	1				
69	90111–06038	BOLT,HEX. SOCKET BUTTON	4	4				

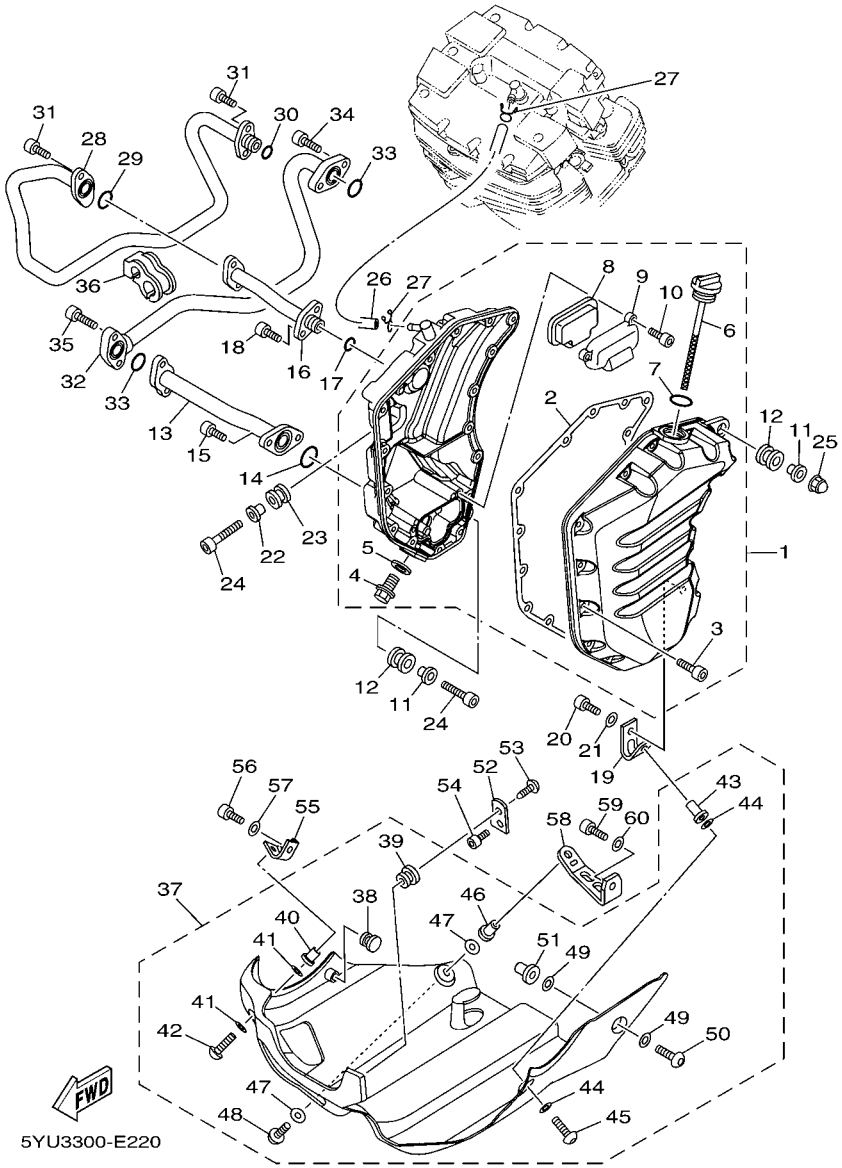

FIG. 22 OIL TANK

REF. NO.	PART NO.	DESCRIPTION	5YU8	5YUB				REMARKS
1	5YU–21750–10	OIL TANK ASSY	1	1				
2	5YU–13475–01	.GASKET	1	1				
3	91314–06030	.BOLT	16	16				
4	90340–14132	.PLUG, STRAIGHT SCREW	1	1				
5	214–11198–01	.GASKET	1	1				
6	5YU–15362–10	.PLUG, OIL LEVEL	1	1				
7	93210–27370	.O-RING	1	1				
8	5YU–13421–00	.STRAINER 2	1	1				
9	5YU–2175T–00	.BRACKET 1	1	1				
10	91317–06016	.BOLT	2	2				
11	90387–06100	COLLAR	2	2				
12	90480–14010	GROMMET	2	2				
13	5YU–13464–00	HOSE, OIL 1	1	1				
14	93210–23326	O-RING	1	1				
15	91314–06020	BOLT	2	2				
16	5YU–13465–00	HOSE, OIL 2	1	1				
17	93210–15171	O-RING	1	1				
18	91314–06020	BOLT	2	2				
19	5YU–2836A–00	BRACKET 1	1	1				
20	91317–06010	BOLT	1	1				
21	92907–06200	WASHER	1	1				
22	90387–06100	COLLAR	1	1				
23	90480–14010	GROMMET	1	1				
24	91314–06030	BOLT	2	2				
25	90176–06041	NUT, CROWN	1	1				
26	90445–11748	HOSE (L410)	1	1				
27	90467–10008	CLIP	2	2				

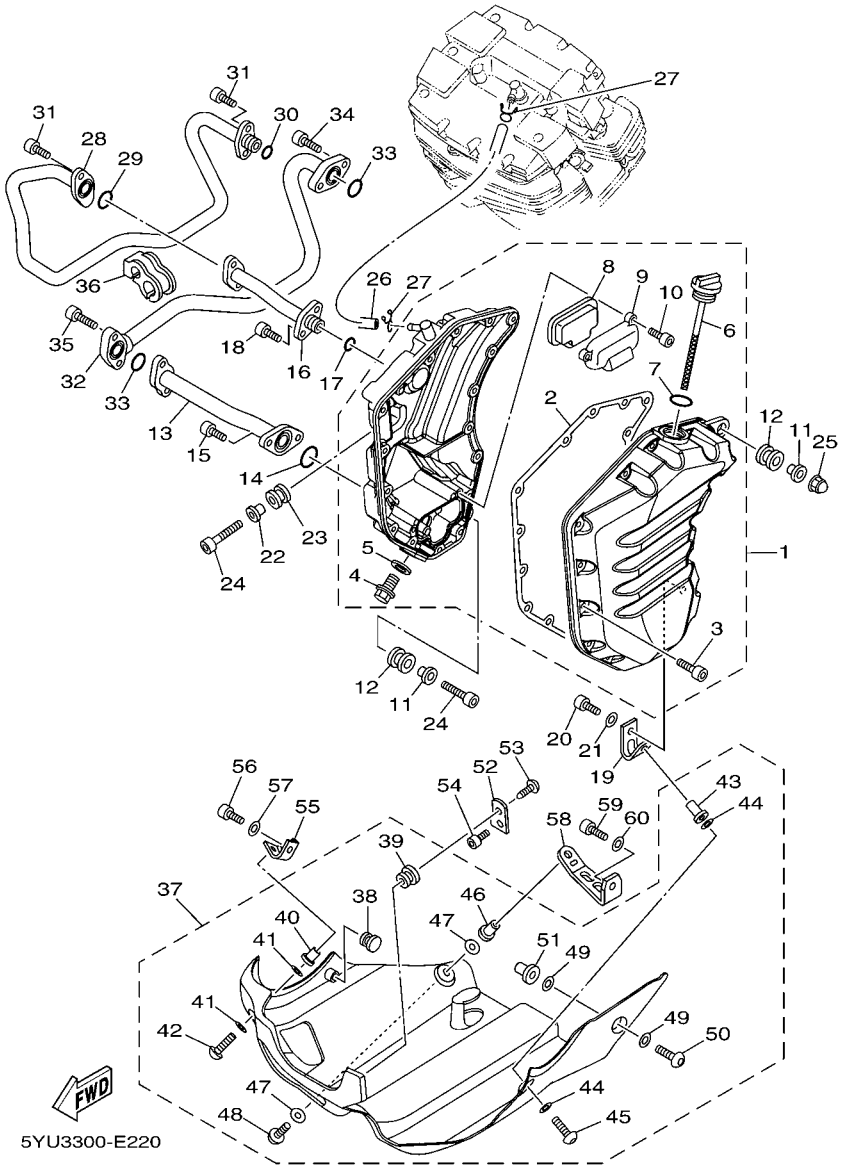

FIG. 22 OIL TANK

REF. NO.	PART NO.	DESCRIPTION	5YU8	5YUB				REMARKS
28	5YU–13416–00	PIPE, OIL 1	1	1				
29	93210–19522	O-RING	1	1				
30	93210–15171	O-RING	1	1				
31	91314–06016	BOLT	3	3				
32	5YU–13418–00	PIPE, OIL 2	1	1				
33	93210–19522	O-RING	2	2				
34	91314–06020	BOLT	2	2				
35	91314–06016	BOLT	2	2				
36	5YU–13159–00	DAMPER	1	1				
37	5YU–Y2808–00–P0	UNDER, COVER ASSY	1	1				MBL2
38	90338–10132	.PLUG	1	1				
39	90480–12072	.GROMMET	1	1				
40	90179–05523	.NUT	1	1				
41	90202–05224	.WASHER, PLATE	2	2				
42	90149–05299	.SCREW	1	1				
43	90179–05523	.NUT	1	1				
44	90202–05224	.WASHER, PLATE	2	2				
45	90149–05299	.SCREW	1	1				
46	90179–05523	.NUT	1	1				
47	90202–05224	.WASHER, PLATE	2	2				
48	90149–05299	.SCREW	1	1				
49	90202–05224	.WASHER, PLATE	2	2				
50	90111–05026	.BOLT,HEX. SOCKET BUTTON	1	1				
51	90179–05525	.NUT	1	1				
52	5YU–28321–00	STAY 1	1	1				
53	90338–08220	PLUG	1	1				
54	91314–06010	BOLT	1	1				

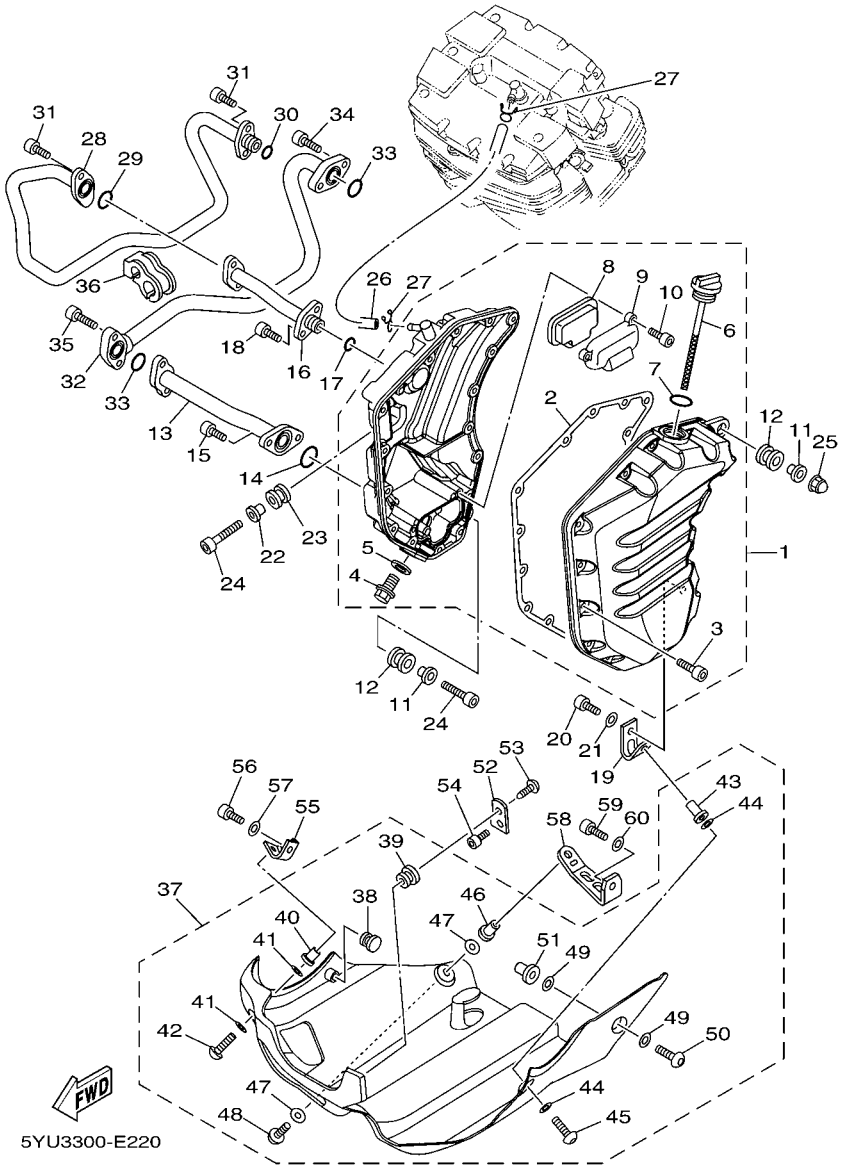

FIG. 22 OIL TANK

REF. NO.	PART NO.	DESCRIPTION	5YU8	5YUB				REMARKS
55	5YU–28322–00	STAY 2	1	1				
56	91317–06014	BOLT	1	1				
57	92907–06200	WASHER	1	1				
58	5YU–2836E–00	BRACKET 2	1	1				
59	91317–06014	BOLT	1	1				
60	92907–06200	WASHER	1	1				

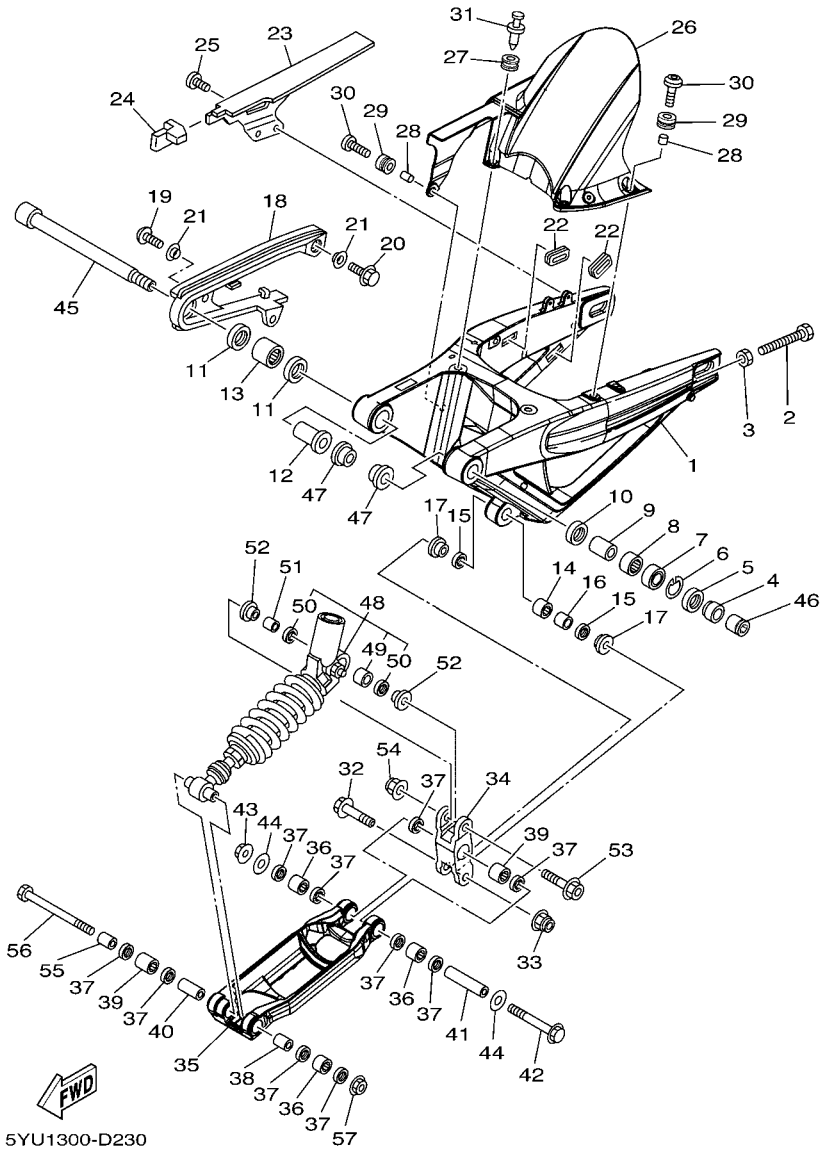

FIG. 23 REAR ARM & SUSPENSION

REF. NO.	PART NO.	DESCRIPTION	5YU8	5YUB				REMARKS
1	5YU–22110–20	REAR ARM COMP.	1	1				
2	90101–08013	BOLT	2	2				
3	95302–08600	NUT	2	2				
4	90387–22010	COLLAR	1	1				
5	93102–30243	OIL SEAL	1	1				
6	99009–40500	CIRCLIP	1	1				
7	93306–97201	BEARING	1	1				
8	93317–42894	BEARING	1	1				
9	90387–22009	COLLAR	1	1				
10	93109–28043	OIL SEAL	1	1				
11	93109–28001	OIL SEAL	2	2				
12	90387–22011	COLLAR	1	1				
13	93317–52897	BEARING	1	1				
14	93315–31758	BEARING	1	1				
15	93109–17071	OIL SEAL	2	2				
16	90387–10040	COLLAR	1	1				
17	90387–10041	COLLAR	2	2				
18	5YU–22151–00	SEAL, GUARD	1	1				
19	90111–06040	BOLT,HEX. SOCKET BUTTON	2	2				
20	90105–06556	BOLT, FLANGE	1	1				
21	90387–06066	COLLAR	3	3				
22	5YU–2219X–00	COVER	4	4				
23	5YU–22311–00	CASE, CHAIN	1	1				
24	5YU–22332–00	DAMPER, CHAIN CASE	1	1				
25	90149–06298	SCREW	2	2				
26	5YU–21650–10	REAR FENDER COMP.	1	1				
27	90480–12480	GROMMET	1	1				

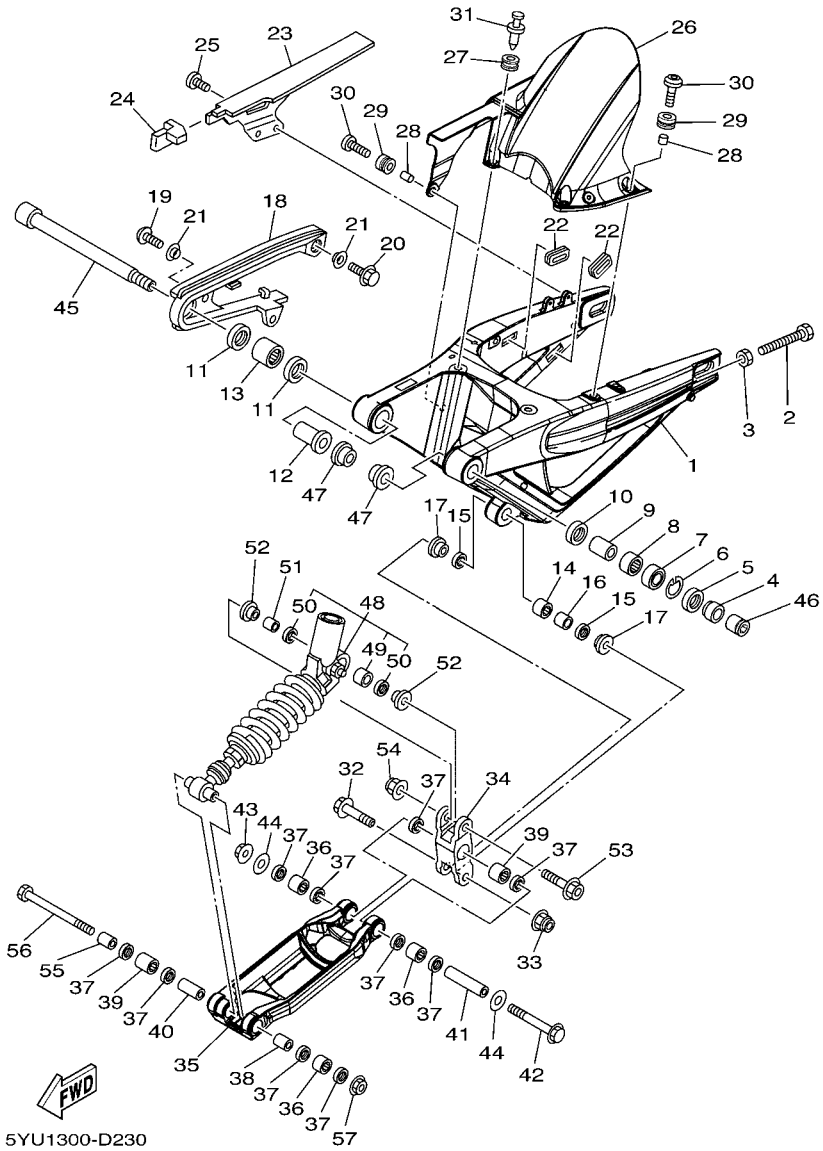

FIG. 23 REAR ARM & SUSPENSION

REF. NO.	PART NO.	DESCRIPTION	5YU8	5YUB				REMARKS
28	90387–0600V	COLLAR	3	3				
29	90480–12003	GROMMET	3	3				
30	90149–06022	SCREW	3	3				
31	90269–08001	RIVET	1	1				
32	90105–10018	BOLT, FLANGE	1	1				
33	95607–10200	NUT, U FLANGE	1	1				
34	5YU–2217A–10	ARM, RELAY	1	1				
35	5YU–2217M–01	ARM 1	1	1				
36	93315–31758	BEARING	3	3				
37	93109–17071	OIL SEAL	10	10				
38	90387–12025	COLLAR	1	1				
39	93315–31750	BEARING	2	2				
40	90387–124V0	COLLAR	1	1				
41	90387–12026	COLLAR	1	1				
42	90105–12034	BOLT, FLANGE	1	1				
43	95607–12200	NUT, SELF-LOCKING	1	1				
44	90201–121U3	WASHER, PLATE	2	2				
45	5YU–22141–00	SHAFT, PIVOT	1	1				
46	5YU–22143–00	NUT	1	1				
47	90387–22008	COLLAR	2	2				
48	5YU–22210–01	SHOCK ABSORBER ASSY, REAR	1	1				
49	93315–31758	.BEARING	1	1				
50	93109–17071	.OIL SEAL	2	2				
51	90387–10040	COLLAR	1	1				
52	90387–10041	COLLAR	2	2				
53	90105–10018	BOLT, FLANGE	1	1				
54	95607–10200	NUT, U FLANGE	1	1				

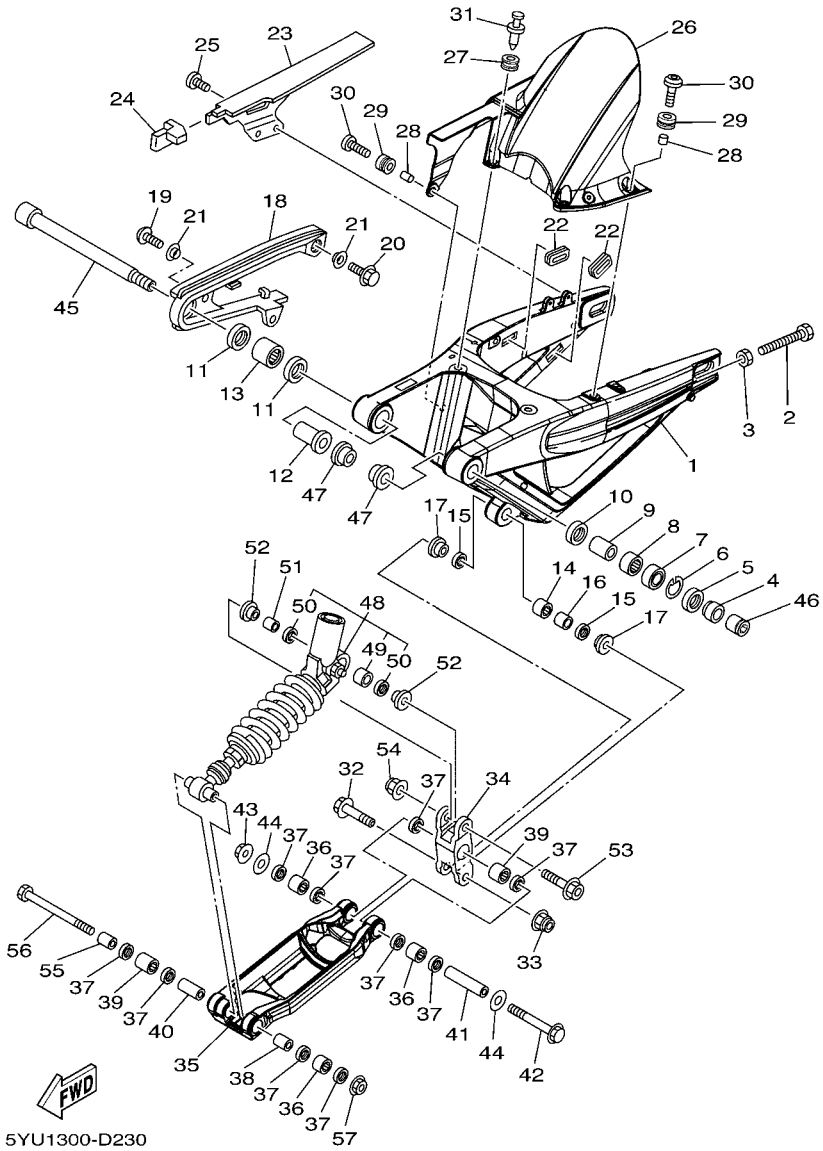

FIG. 23 REAR ARM & SUSPENSION

REF. NO.	PART NO.	DESCRIPTION	5YU8	5YUB				REMARKS
55	90387–12027	COLLAR	1	1				
56	90101–12016	BOLT	1	1				
57	95607–12200	NUT, SELF-LOCKING	1	1				

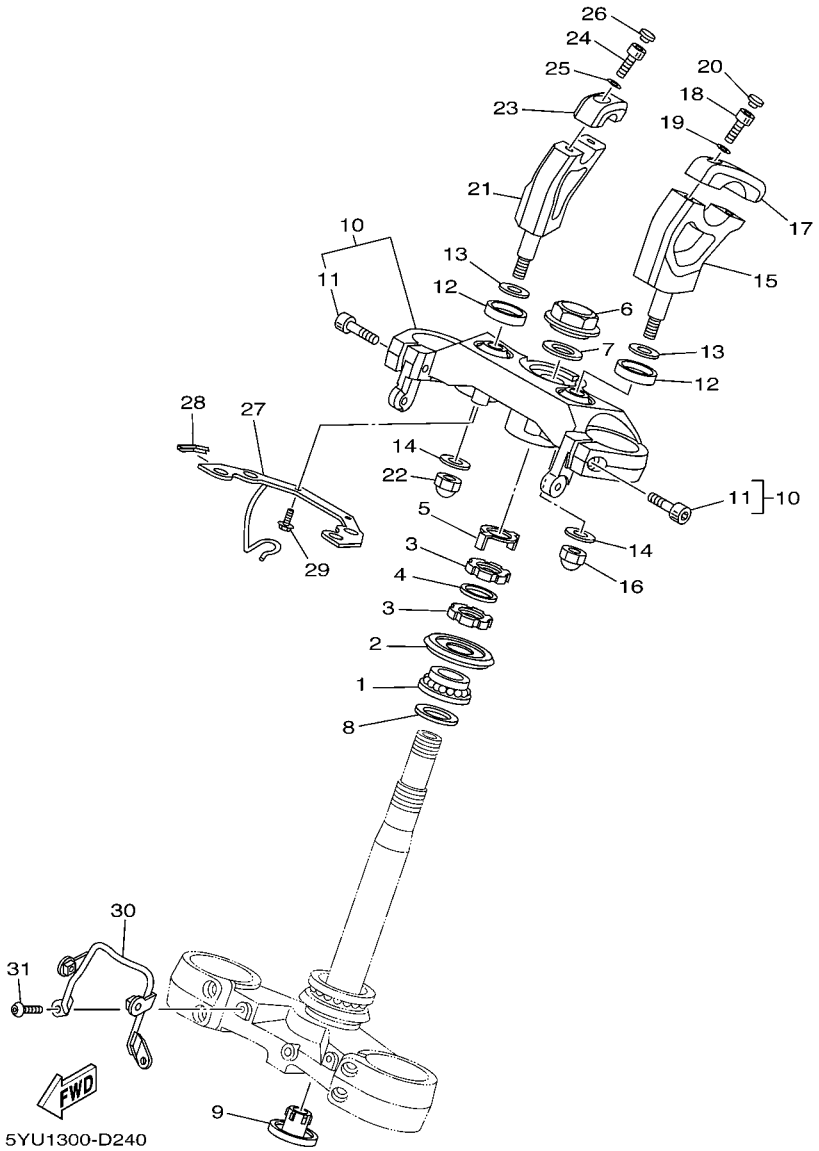

FIG. 24 STEERING

REF. NO.	PART NO.	DESCRIPTION	5YU8	5YUB				REMARKS
1	93399–99931	BEARING	1	1				
2	5VX–23415–00	COVER, BALL RACE 1	1	1				
3	90179–25033	NUT	2	2				
4	90202–26142	WASHER, PLATE	1	1				
5	26H–23418–01	WASHER, SPECIAL	1	1				
6	90179–22009	NUT	1	1				
7	90201–220T0	WASHER, PLATE	1	1				
8	90202–24190	WASHER, PLATE	1	1				
9	4KM–23123–01	COVER, LOWER 1	1	1				
10	5YU–23405–00	CROWN, HANDLE ASSY	1	1				
11	91314–08030	.BOLT	2	2				
12	5YU–23445–00	DAMPER	2	2				
13	90201–14220	WASHER, PLATE	2	2				
14	90201–12018	WASHER, PLATE	2	2				
15	5YU–23442–00	HOLDER, HANDLE LOWER	1	1				
16	90176–12052	NUT, CROWN	1	1				
17	5YU–23441–00	HOLDER, HANDLE UPPER	1	1				
18	91314–08030	BOLT	2	2				
19	90201–08052	WASHER, PLATE	2	2				
20	90338–08163	PLUG	2	2				
21	5YU–2344E–00	HOLDER, HANDLE LOWER 1	1	1				
22	90176–12052	NUT, CROWN	1	1				
23	5YU–2344A–00	HOLDER, HANDLE UPPER 1	1	1				
24	91314–08030	BOLT	2	2				
25	90201–08052	WASHER, PLATE	2	2				
26	90338–08163	PLUG	2	2				
27	5YU–2834L–00	BRKT., METER	1	1				

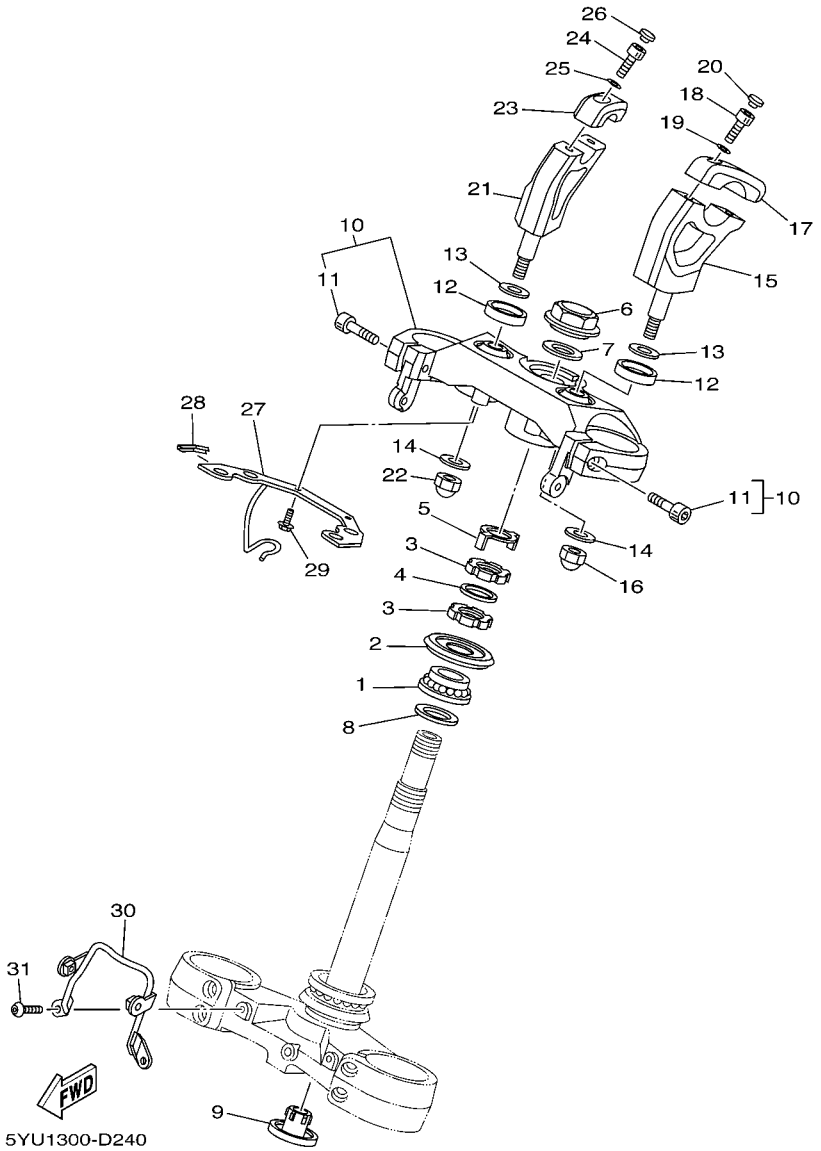

FIG. 24 STEERING

REF. NO.	PART NO.	DESCRIPTION	5YU8	5YUB				REMARKS
28	5YU–28428–00	SEAL 1	1	1				
29	95817–06012	BOLT, FLANGE	2	2				
30	5YU–23175–00	BRACKET, HEADLIGHT STAY 1	1	1				
31	92014–06012	BOLT, BUTTON HEAD	2	2				

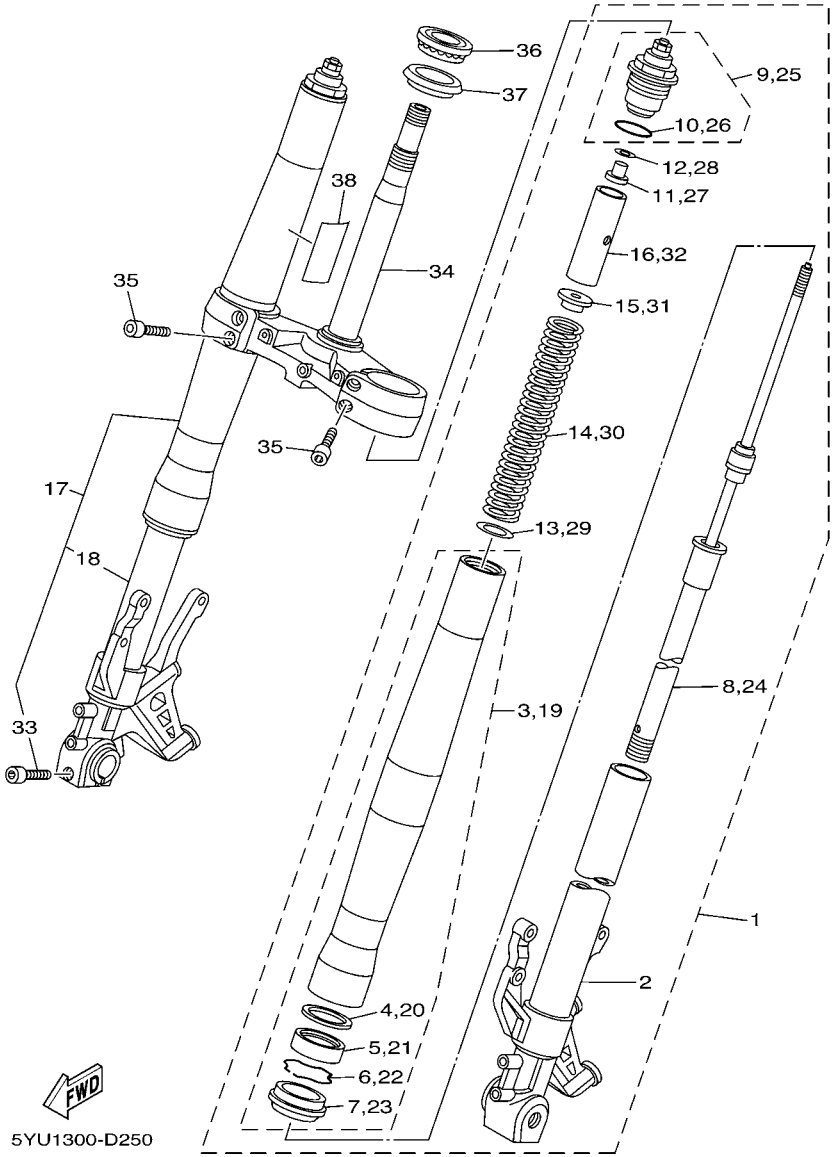

FIG. 25 FRONT FORK

REF. NO.	PART NO.	DESCRIPTION	5YU8	5YUB				REMARKS
1	5YU–23102–10	FRONT FORK ASSY (L.H)	1	1				
2	5YU–23110–10	.INNER TUBE COMP.1	1	1				
3	5YU–23106–00	.OUTER TUBE COMP. (L.H)	1	1				
4	4TX–23115–00	..GUIDE, COVER UPPER	1	1				
5	5VX–23145–00	..OIL SEAL	1	1				
6	4TX–23156–00	..CLIP, OIL SEAL	1	1				
7	4TX–23144–00	..SEAL, DUST	1	1				
8	5YU–23170–00	.CYLINDER COMP., FRONT FORK	1	1				
9	5YU–23111–00	.BOLT, CAP	1	1				
10	93210–41N50	..O-RING	1	1				
11	5YU–23393–00	.NUT, SPECIAL	1	1				
12	5YU–2332N–00	.PLATE, VALVE 2	1	1				
13	5YU–23143–00	.SEAT, SPRING LOWER	1	1				
14	5YU–23141–00	.SPRING, FRONT FORK	1	1				
15	5YU–23142–00	.SEAT, SPRING UPPER	1	1				
16	5YU–23118–00	.SPACER	1	1				
17	5YU–23103–10	FRONT FORK ASSY (R.H)	1	1				
18	5YU–23120–10	.INNER TUBE COMP.2	1	1				
19	5YU–23106–00	.OUTER TUBE COMP. (L.H)	1	1				
20	4TX–23115–00	..GUIDE, COVER UPPER	1	1				
21	5VX–23145–00	..OIL SEAL	1	1				
22	4TX–23156–00	..CLIP, OIL SEAL	1	1				
23	4TX–23144–00	..SEAL, DUST	1	1				
24	5YU–23170–00	.CYLINDER COMP., FRONT FORK	1	1				
25	5YU–23111–00	.BOLT, CAP	1	1				
26	93210–41N50	..O-RING	1	1				
27	5YU–23393–00	.NUT, SPECIAL	1	1				

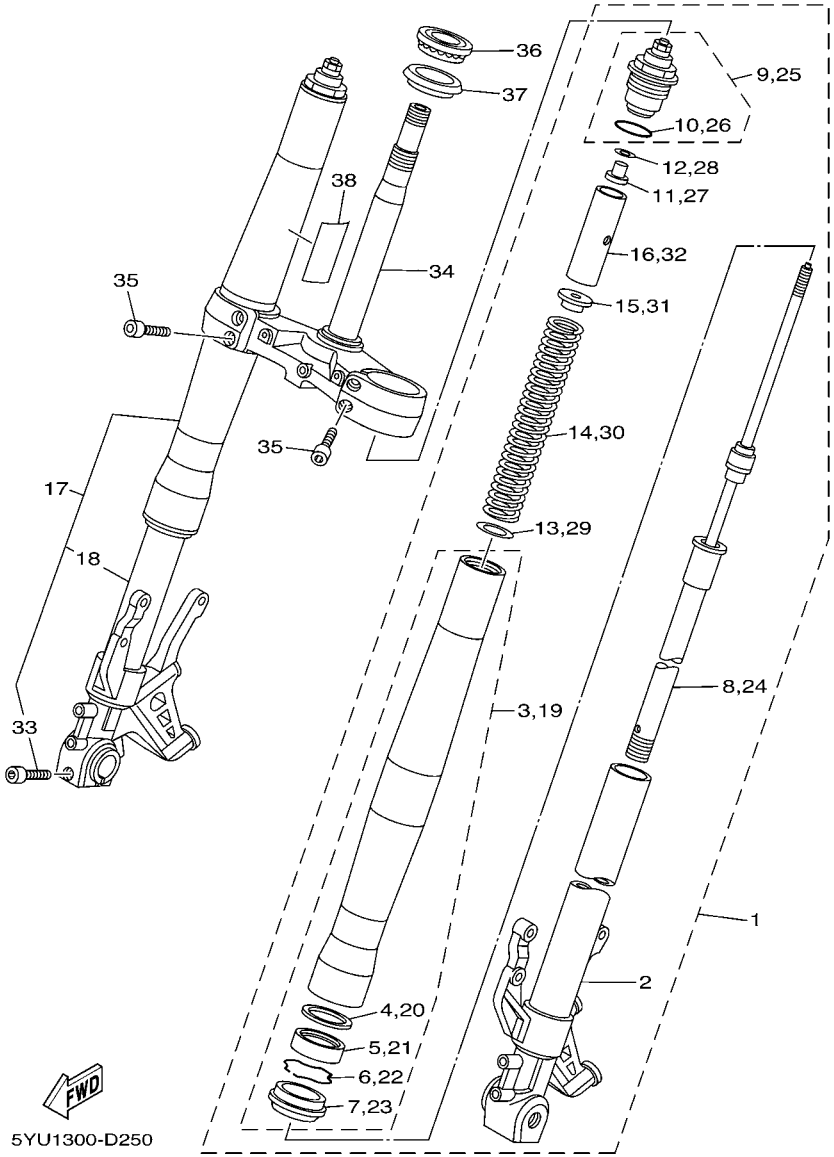

FIG. 25 FRONT FORK

REF. NO.	PART NO.	DESCRIPTION	5YU8	5YUB				REMARKS
28	5YU–2332N–00	.PLATE, VALVE 2	1	1				
29	5YU–23143–00	.SEAT, SPRING LOWER	1	1				
30	5YU–23141–00	.SPRING, FRONT FORK	1	1				
31	5YU–23142–00	.SEAT, SPRING UPPER	1	1				
32	5YU–23118–00	.SPACER	1	1				
33	91314–08035	.BOLT	1	1				
34	5YU–23340–00	UNDER BRACKET COMP.	1	1				
35	91314–08035	BOLT	4	4				
36	93399–99932	BEARING	1	1				
37	3FV–23462–00	SEAL, STEERING	1	1				
38	5YU–23844–00	SEAL	1	1				

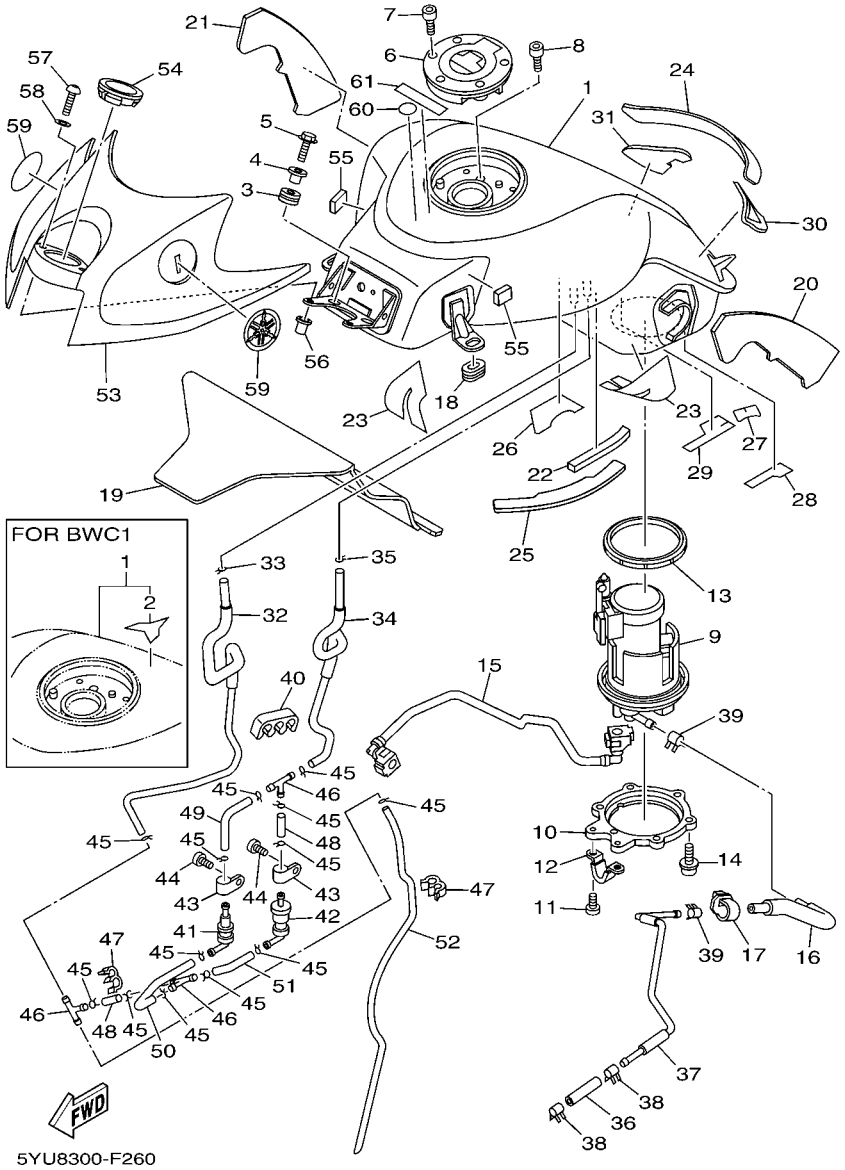

FIG. 26 FUEL TANK

REF. NO.	PART NO.	DESCRIPTION	5YU8	5YUB				REMARKS
1	5YU–YK241–30–P3	FUEL TANK COMP.	1					UR FOR SMX
	5YU–Y2410–30–02	FUEL TANK COMP.	1					UR FOR BWC1
	5YU–Y2410–30–01	FUEL TANK COMP.		1				FOR DRMK
2	5YU–24161–00	.EMBLEM 1	1					FOR BWC1
3	90480–16003	GROMMET	2	2				
4	90387–06097	COLLAR	2	2				
5	90119–06062	BOLT, WITH WASHER	2	2				
6	5PX–24602–01	CAP ASSY	1	1				
7	90110–05112	BOLT, HEXAGON SOCKET HEAD	4	4				
8	91317–05010	BOLT	1	1				
9	5YU–13907–03	FUEL PUMP COMP.	1	1				
10	5SL–24491–00	BRACKET, FUEL PUMP	1	1				
11	98907–05008	SCREW, BIND	2	2				
12	5YU–24192–00	BRACKET, FUEL TANK 2	1	1				
13	5JW–24486–00	O-RING	1	1				
14	90110–05014	BOLT, HEXAGON SOCKET HEAD	6	6				
15	5YU–13971–00	PIPE, FUEL 1	1	1				
16	5YU–13973–00	PIPE, FUEL 3	1	1				
17	5JW–1479J–00	COVER 2	1	1				
18	90480–01558	GROMMET	2	2				
19	5YU–2414H–00	DAMPER, PLATE 1	1	1				
20	5YU–2414N–00	DAMPER, PLATE 4	1	1				
21	5YU–2414P–00	DAMPER, PLATE 5	1	1				
22	8CR–77319–00	DAMPER 1	1	1				
23	5YU–24141–00	PROTECTOR, FUEL TANK	2	2				
24	5YU–24193–00	SEAT, TANK PROTECTOR	1	1				
25	5YU–2315H–00	PROTECTOR 1	2	2				

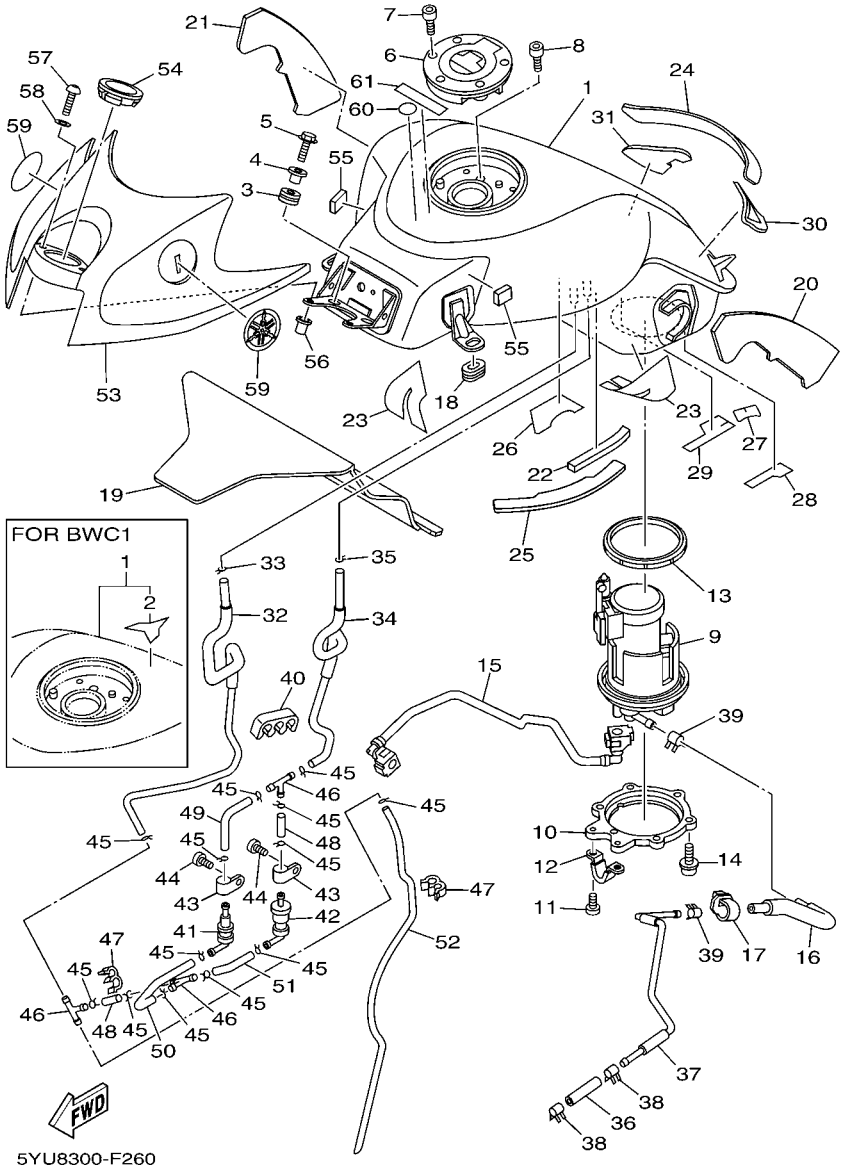

FIG. 26 FUEL TANK

REF. NO.	PART NO.	DESCRIPTION	5YU8	5YUB				REMARKS
26	5YU–2476U–00	PROTECTOR,1	1	1				
27	5YU–2376R–00	PROTECTOR	1	1				
28	5YU–2476V–00	PROTECTOR,2	1	1				
29	5YU–24595–00	PROTECTOR	1	1				
30	5YU–24723–00	DAMPER, SEAT	1	1				
31	5YU–24724–00	DAMPER, SEAT	1	1				
32	5YU–24315–00	PIPE 5	1	1				
33	90467–09006	CLIP	1	1				
34	5YU–24317–00	PIPE 7	1	1				
35	90467–09006	CLIP	1	1				
36	90445–13M03	HOSE (L50)	1	1				
37	5YU–14295–00	PIPE, FUEL	1	1				
38	90467–11044	CLIP	2	2				
39	90467–12003	CLIP	2	2				
40	90464–09020	CLAMP	1	1				
41	3UH–24180–00	ROLL OVER VALVE ASSY	1	1				
42	5RB–24180–00	ROLL OVER VALVE ASSY	1	1				
43	90461–15139	CLAMP	2	2				
44	98907–05012	SCREW, BIND	2	2				
45	90467–09006	CLIP	13	13				
46	90413–07007	WAY 3	3	3				
47	90464–10005	CLAMP	2	2				
48	5YU–24311–00	PIPE, FUEL 1	2	2				
49	5YU–24312–00	PIPE 2	1	1				
50	5YU–24313–00	PIPE 3	1	1				
51	5YU–24314–00	PIPE 4	1	1				
52	5YU–24316–00	PIPE 6	1	1				

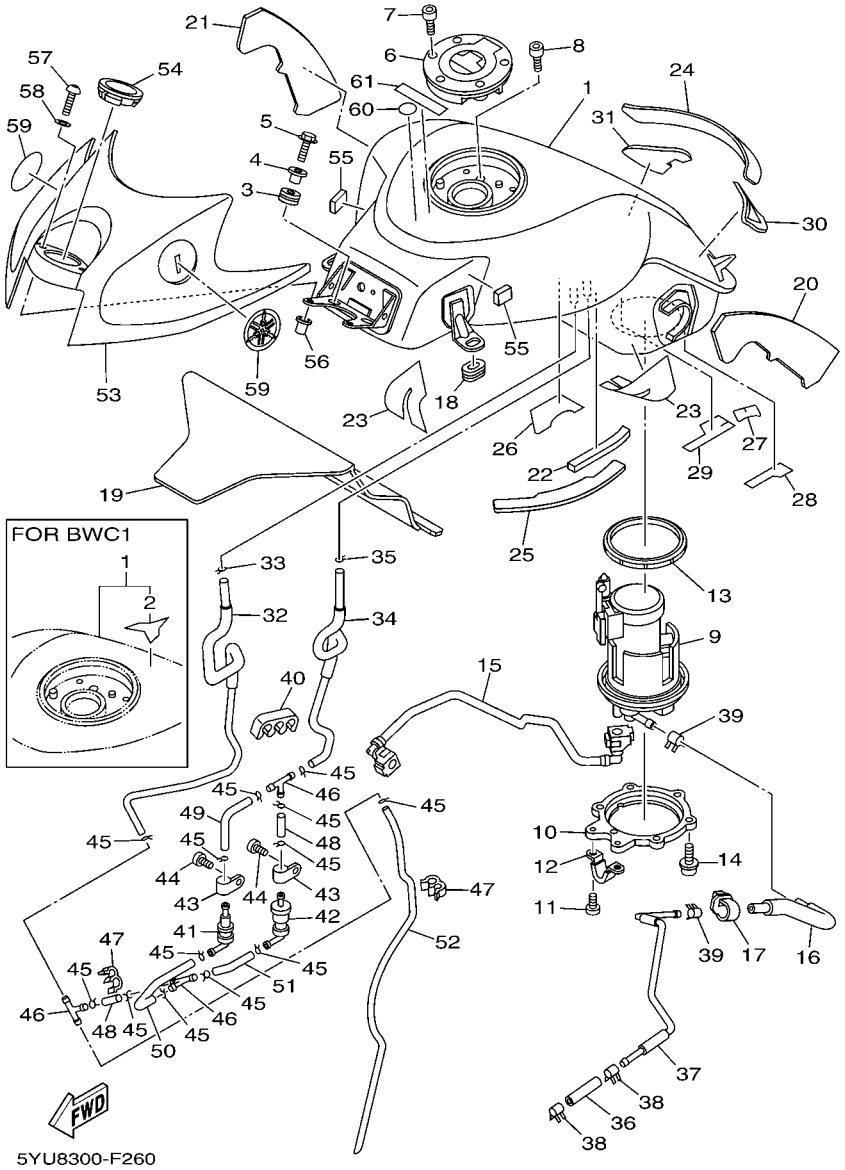

FIG. 26 FUEL TANK

REF. NO.	PART NO.	DESCRIPTION	5YU8	5YUB				REMARKS
53	5YU–2171A–00–P3	COVER, TOP	1	1				UR FOR SMX,DRMK
	5YU–2171A–00–P4	COVER, TOP	1					UR FOR BWC1
54	5YU–82545–00	GROMMET	1	1				
55	5YU–21778–00	DAMPER, LOCATING 1	2	2				
56	90179–05523	NUT	2	2				
57	92014–05016	BOLT, BUTTON HEAD	2	2				
58	90202–05088	WASHER, PLATE	2	2				
59	5YU–2411B–00	EMBLEM	2	2				
60	3ME–2415E–01	LABEL, CAUTION	1	1				
61	5PA–21568–00	LABEL, WARNING	1	1				

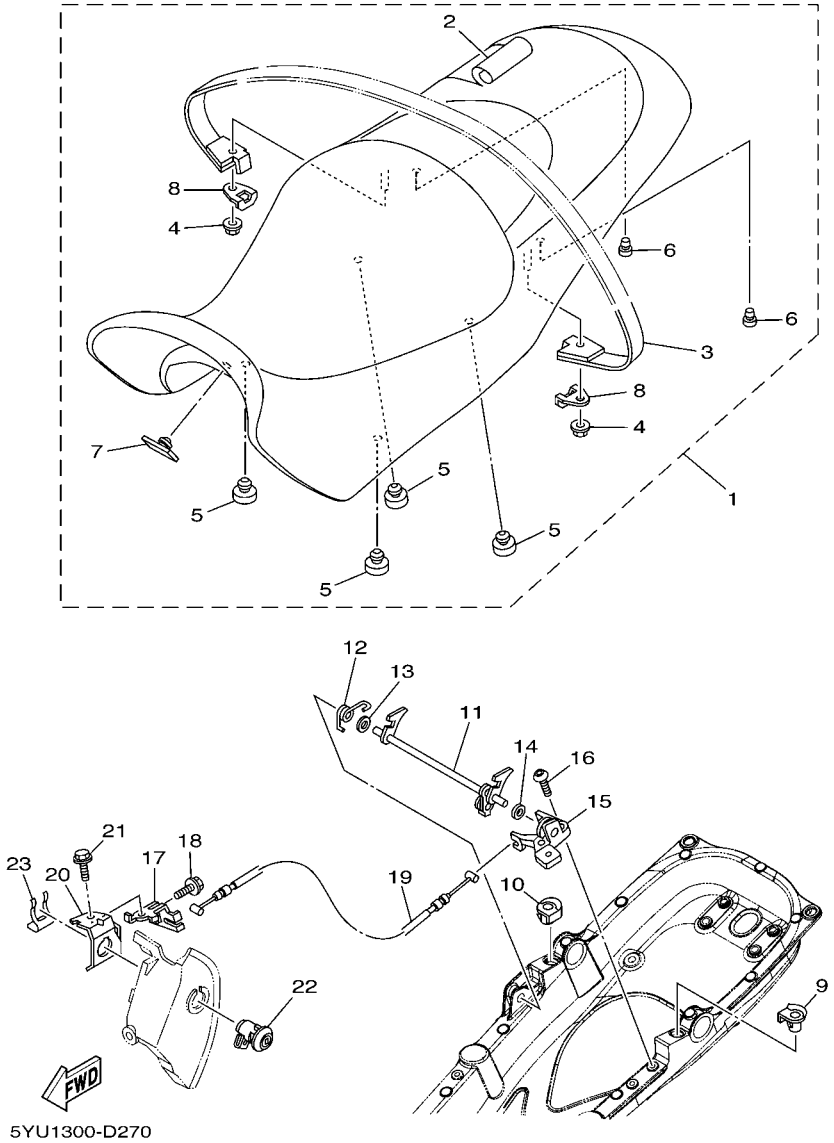

FIG. 27 SEAT

REF. NO.	PART NO.	DESCRIPTION	5YU8	5YUB				REMARKS
1	5YU–24730–00	DOUBLE SEAT ASSY	1	1				UR FOR SMX,DRMK
	5YU–24730–10	DOUBLE SEAT ASSY	1					UR FOR BWC1
2	5YU–2470F–00	.SEAT COVER COMP.	1	1				UR FOR SMX,DRMK
	5YU–2470F–10	.SEAT COVER COMP.	1					UR FOR BWC1
3	5YU–24720–00	.SEAT BAND ASSY	1	1				
4	95607–06200	.NUT, SELF U-FLANGE	2	2				
5	5PS–24741–00	.PAD, SEAT	4	4				
6	5SL–24723–00	.DAMPER, SEAT	2	2				
7	509–24724–00	.DAMPER, SEAT	1	1				
8	5YU–2474F–00	.STAY, FRONT 1	2	2				
9	5YU–2482H–00	CAP	1	1				
10	5YU–2482H–10	CAP	1	1				
11	5YU–24776–00	LEVER, SEAT	1	1				
12	5YU–24758–00	SPRING	1	1				
13	90202–08001	WASHER, PLATE	1	1				
14	90202–08M43	WASHER, PLATE	1	1				
15	5YU–24775–00	BRACKET, SEAT LEVER	1	1				
16	92017–06025	BOLT, BUTTON HEAD	2	2				
17	5YU–2115K–00	BRACKET, 1	1	1				
18	90109–05007	BOLT	1	1				
19	5YU–2478E–00	CABLE, SEAT LOCK	1	1				
20	5YU–2117K–00	STAY, LOCK	1	1				
21	95807–06012	BOLT, FLANGE	1	1				
22	5VY–W2470–00	SEAT LOCK ASSY	1	1				
23	5YU–2176V–00	SPRING, LOCK 2	1	1				

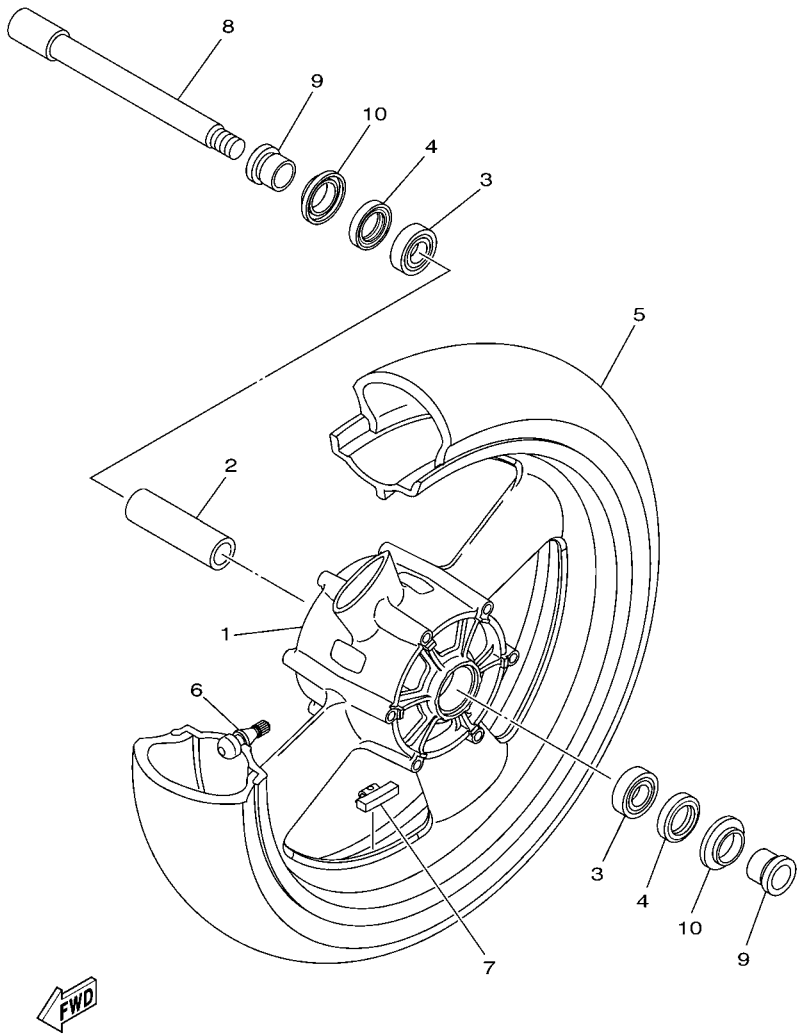

5YU1300-D280

FIG. 28 FRONT WHEEL

REF. NO.	PART NO.	DESCRIPTION	5YU8	5YUB				REMARKS
1	5YU–25168–00–98	CAST WHEEL, FRONT	1					UR LGB FOR SMX
	5YU–25168–00–P1	CAST WHEEL, FRONT	1					UR S8 FOR BWC1
	5YU–25168–00–1X	CAST WHEEL, FRONT		1				LGB/HTR FOR DRMK
2	4XV–25117–00	SPACER, BEARING	1	1				
3	93306–00420	BEARING	2	2				
4	93106–28043	OIL SEAL	2	2				
5	*	TIRE (120/70ZR17 M/C 58W)	1	1				UR LM PIRELLI
	*	TIRE (120/70ZR17 M/C 58W)	1	1				UR LM MICHELIN
6	93900–00030	VALVE, RIM (TR412)	1	1				TAIHEIYO
7	5MT–25398–00	BALANCER, WHEEL (10G)	1	1				UN
	5MT–25398–10	BALANCER, WHEEL (20G)	1	1				UN
	5MT–25398–20	BALANCER, WHEEL (30G)	1	1				UN
8	4XV–25181–10	AXLE, WHEEL	1	1				
9	4XV–25186–00	COLLAR, WHEEL	2	2				
10	4XV–25118–00	COVER, HUB DUST	2	2				

FIG. 29 FRONT BRAKE CALIPER

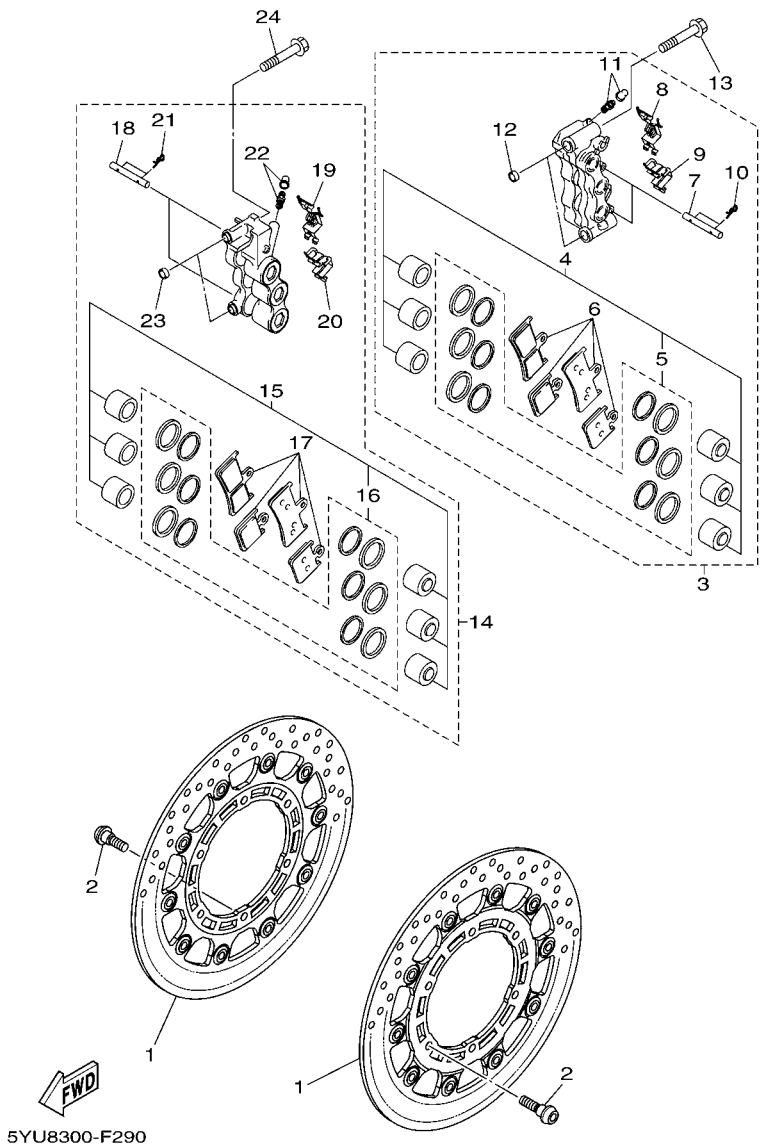

REF. NO.	PART NO.	DESCRIPTION	5YU8	5YUB				REMARKS
1	5YU–2581T–10	DISK BRAKE ASSY	2	2				
2	90149–06043	SCREW	12	12				
3	4C8–2580T–00	CALIPER ASSY (LEFT)	1	1				
4	4C8–W0057–00	.PISTON ASSY, CALIPER	1	1				
5	4C8–W0047–00	..CALIPER SEAL KIT	1	1				
6	4C8–W0045–00	.BRAKE PAD KIT	1	1				
7	4SV–25924–00	.PIN, PAD	2	2				
8	4C8–25919–00	.SUPPORT, PAD	1	1				
9	4C8–25919–10	.SUPPORT, PAD	1	1				
10	3GM–25925–00	.CLIP	4	4				
11	1J3–W0048–00	.BLEED SCREW KIT	1	1				
12	5VY–2583B–00	.PIN, KNOCK	2	2				
13	90401–10012	BOLT, UNION	2	2				
14	4C8–2580U–00	CALIPER ASSY (RIGHT)	1	1				
15	4C8–W0057–00	.PISTON ASSY, CALIPER	1	1				
16	4C8–W0047–00	..CALIPER SEAL KIT	1	1				
17	4C8–W0045–00	.BRAKE PAD KIT	1	1				
18	4SV–25924–00	.PIN, PAD	2	2				
19	4C8–25919–00	.SUPPORT, PAD	1	1				
20	4C8–25919–10	.SUPPORT, PAD	1	1				
21	3GM–25925–00	.CLIP	4	4				
22	1J3–W0048–00	.BLEED SCREW KIT	1	1				
23	5VY–2583B–00	.PIN, KNOCK	2	2				
24	90401–10012	BOLT, UNION	2	2				

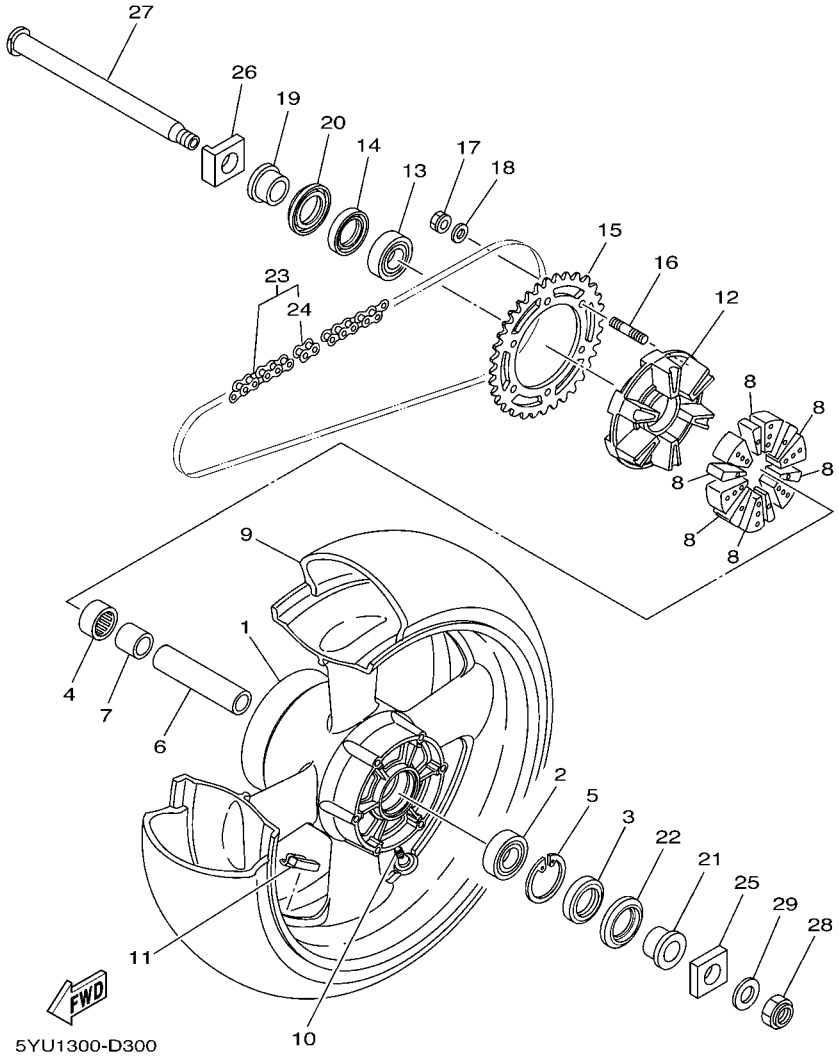

FIG. 30 REAR WHEEL

REF. NO.	PART NO.	DESCRIPTION	5YU8	5YUB				REMARKS
1	5YU–25338–00–98	CAST WHEEL, REAR	1					UR LGB FOR SMX
	5YU–25338–00–P1	CAST WHEEL, REAR	1					UR S8 FOR BWC1
	5YU–25338–00–1X	CAST WHEEL, REAR		1				LGB/HTR FOR DRMK
2	93306–20531	BEARING	1	1				
3	93106–40013	OIL SEAL	1	1				
4	93317–33590	BEARING	1	1				
5	93420–61M07	CIRCLIP	1	1				
6	5PW–25317–00	SPACER, BEARING	1	1				
7	4XV–25383–00	COLLAR, WHEEL	1	1				
8	5YU–25364–00	DAMPER	6	6				
9	*	TIRE (190/50ZR17 M/C 73W)	1	1				UR LM PIRELLI
	*	TIRE (190/50ZR17 M/C 73W)	1	1				UR LM MICHELIN
10	93900–00030	VALVE, RIM (TR412)	1	1				TAIHEIYO
11	5MT–25398–00	BALANCER, WHEEL (10G)	1	1				UN
	5MT–25398–10	BALANCER, WHEEL (20G)	1	1				UN
	5MT–25398–20	BALANCER, WHEEL (30G)	1	1				UN
12	5PW–25366–00	CLUTCH, HUB	1	1				
13	93306–20531	BEARING	1	1				
14	93106–40013	OIL SEAL	1	1				
15	5YU–25439–00	SPROCKET, DRIVEN (39T)	1	1				
16	90116–10485	BOLT, STUD	6	6				
17	90185–10009	NUT, SELF-LOCKING	6	6				
18	90201–10021	WASHER, PLATE	6	6				
19	5SL–25376–00	COLLAR, WHEEL	1	1				
20	5SL–25367–00	COVER, HUB DUST	1	1				
21	5YU–25377–00	COLLAR, WHEEL	1	1				
22	5SL–25367–00	COVER, HUB DUST	1	1				

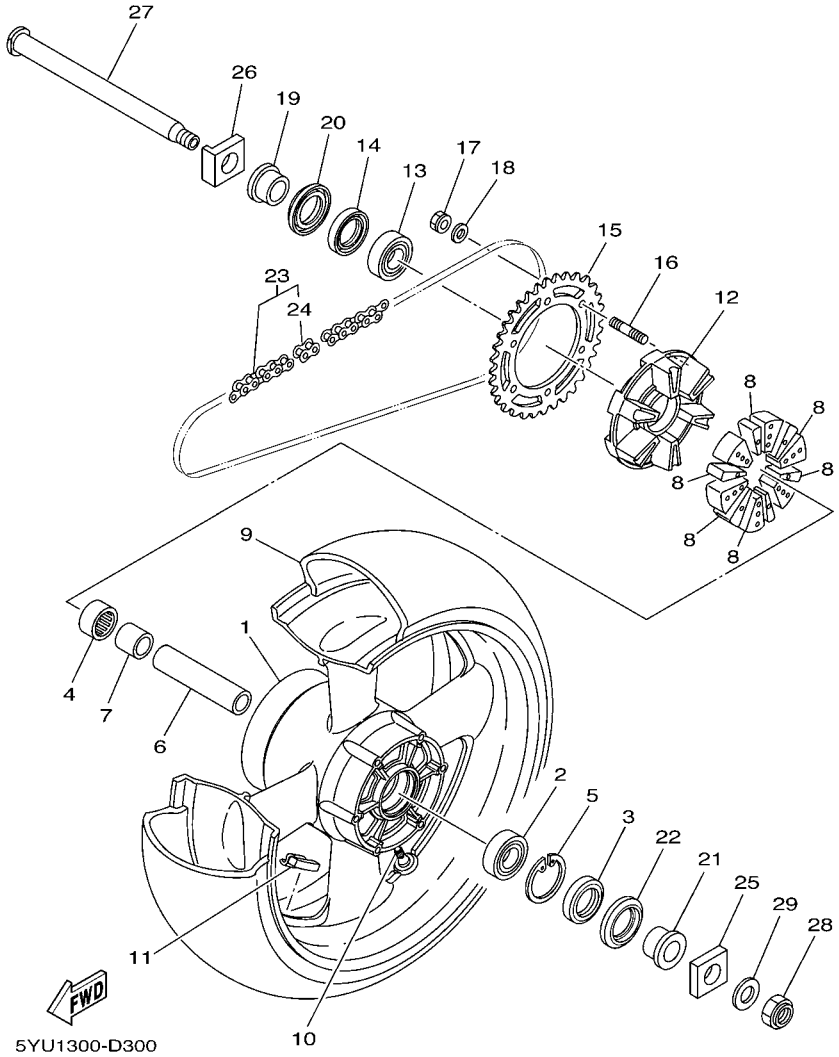

FIG. 30 REAR WHEEL

REF. NO.	PART NO.	DESCRIPTION	5YU8	5YUB				REMARKS
23	94582–16114	CHAIN (DID50VM3-114LL)	1	1				
24	94682–16031	.JOINT, CHAIN (DID50VM3)	1	1				
25	5YU–25388–00	PULLER, CHAIN 1	1	1				
26	5YU–25389–00	PULLER, CHAIN 2	1	1				
27	5SL–25381–10	AXLE, WHEEL	1	1				
28	90185–24007	NUT, SELF-LOCKING	1	1				
29	90201–25018	WASHER, PLATE	1	1				

FIG. 31 REAR BRAKE CALIPER

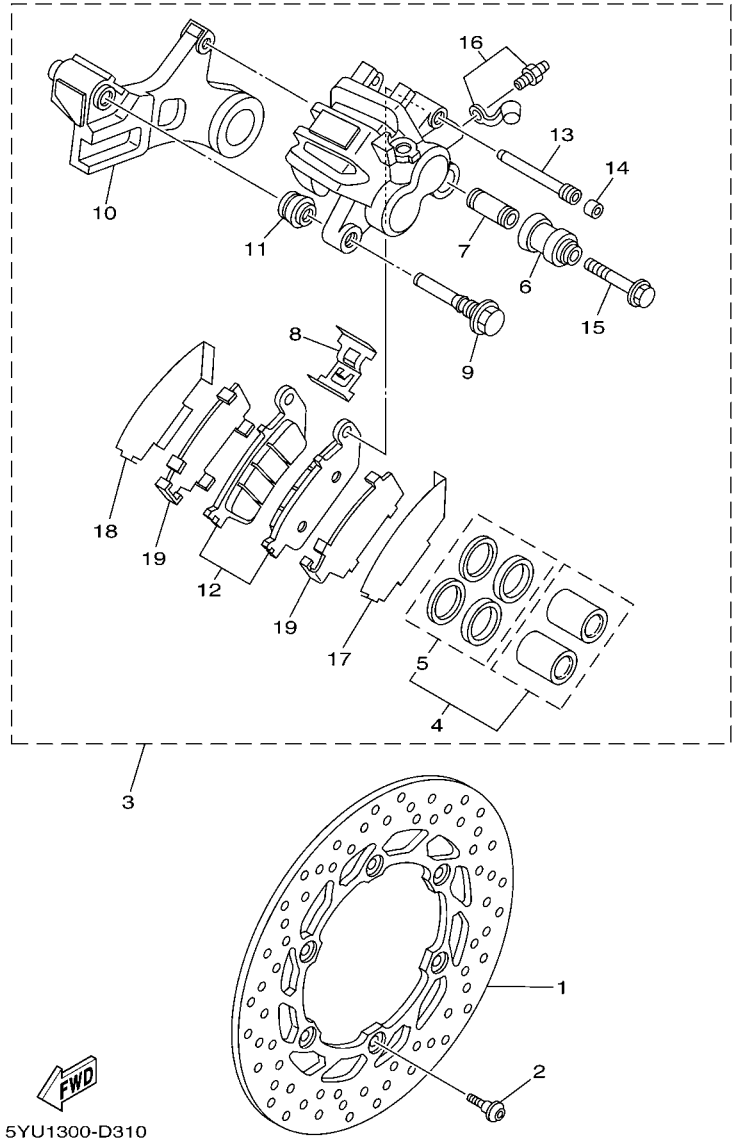

REF. NO.	PART NO.	DESCRIPTION	5YU8	5YUB				REMARKS
1	5YU–2582V–00	DISC, REAR BRAKE 1	1	1				
2	90109–064G6	BOLT	6	6				
3	5YU–2580V–00	CALIPER ASSY, REAR 1	1	1				
4	3LD–W0057–00	.PISTON ASSY, CALIPER	1	1				
5	3JD–W0047–00	..CALIPER SEAL KIT	1	1				
6	5SL–25917–00	.BOOT, CALIPER	1	1				
7	5SL–25838–00	.SLEEVE, CALIPER	1	1				
8	5YU–25919–00	.SUPPORT, PAD	1	1				
9	5YU–25914–00	.PIN, SLIDE	1	1				
10	5YU–25921–00	.BRACKET, SUPPORT	1	1				
11	3JD–25917–00	.BOOT, CALIPER	1	1				
12	5YU–W0046–00	.BRAKE PAD KIT 2	1	1				
13	5YU–25924–00	.PIN, PAD	1	1				
14	5DH–25916–00	.PLUG	1	1				
15	5SL–25926–00	.BOLT	1	1				
16	1UY–W0048–00	.BLEED SCREW KIT	1	1				
17	5YU–25827–00	.SHIM, CALIPER	1	1				
18	5YU–25827–10	.SHIM, CALIPER	1	1				
19	5YU–25828–00	.SHIM, CALIPER	2	2				

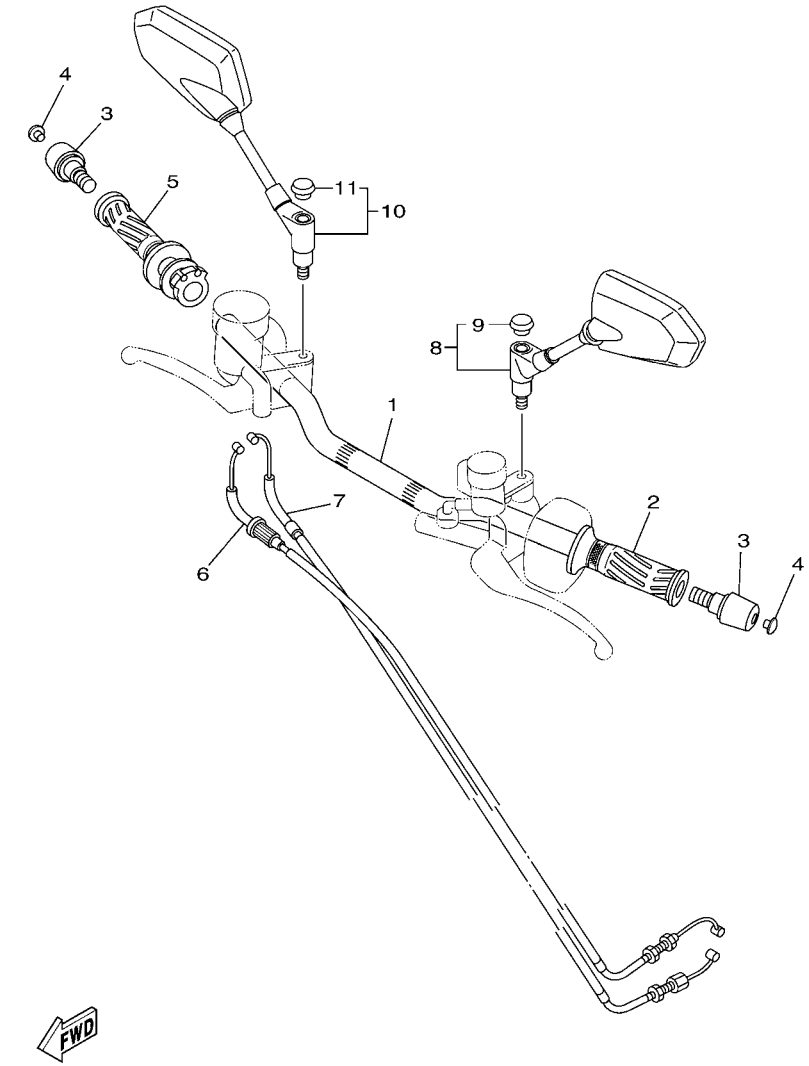

5YU8300-F320

FIG. 32 STEERING HANDLE & CABLE

REF. NO.	PART NO.	DESCRIPTION	5YU8	5YUB				REMARKS
1	5YU–26111–10	HANDLEBAR	1	1				
2	4YR–26241–02	GRIP (LEFT)	1	1				
3	5YU–26246–00	END, GRIP	2	2				
4	5EL–23469–00	CAP, BOLT	2	2				
5	4YR–26240–02	GRIP ASSY	1	1				
6	5YU–26311–01	CABLE, THROTTLE 1	1	1				
7	5YU–26312–00	CABLE, THROTTLE 2	1	1				
8	5YU–26280–20	REAR VIEW MIRROR ASSY (LEFT)	1	1				
9	5PS–26133–10	.CAP	1	1				
10	5YU–26290–20	REAR VIEW MIRROR ASSY (RIGHT)	1	1				
11	5PS–26133–10	.CAP	1	1				

FIG. 33 FRONT MASTER CYLINDER

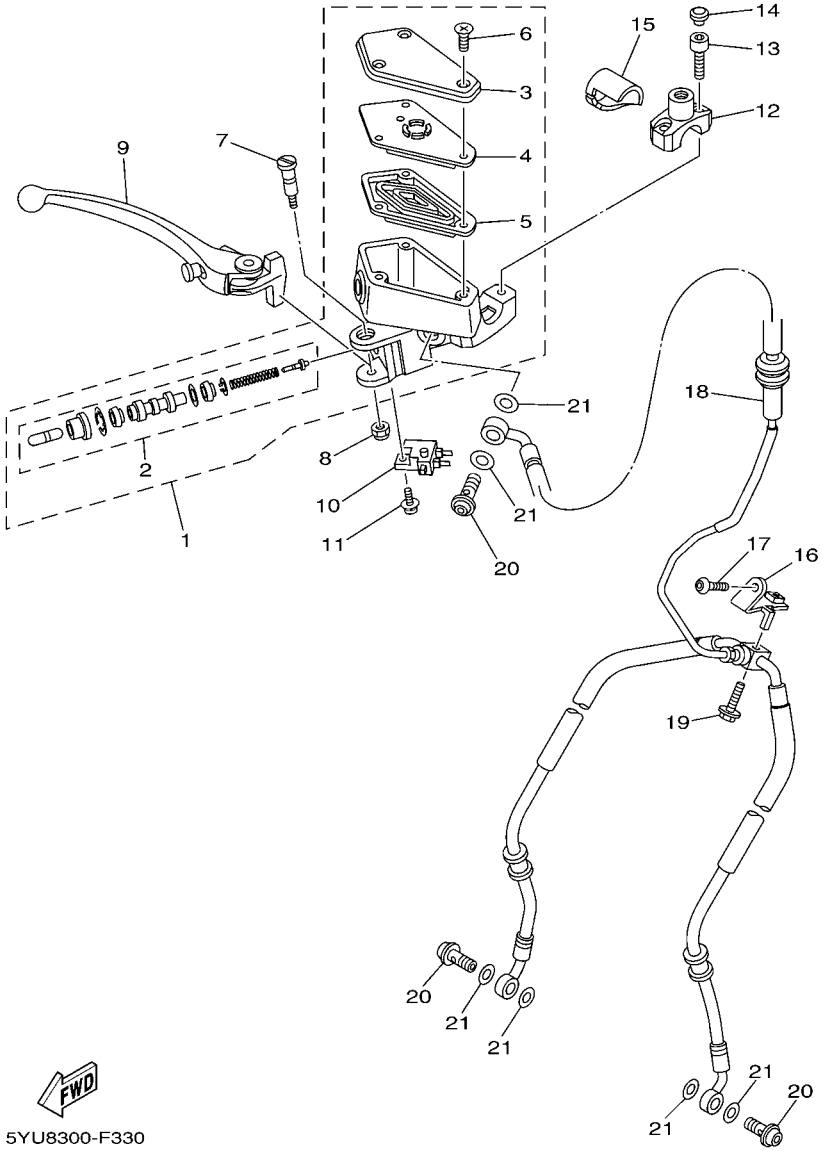

REF. NO.	PART NO.	DESCRIPTION	5YU8	5YUB				REMARKS
1	5YU–W2587–10	MASTER CYLINDER SUB ASSY	1	1				
2	5VY–W0041–00	.CYLINDER KIT, MASTER	1	1				
3	5YU–25852–10	.CAP, RESERVOIR	1	1				
4	5YU–25855–10	.BUSH,DIAPHRAGM	1	1				
5	5YU–25854–10	.DIAPHRAGM, RESERVOIR	1	1				
6	5VS–2589H–00	.SCREW	3	3				
7	5VY–2589F–01	BOLT, LEVER	1	1				
8	5VS–2586F–00	NUT, COVER	1	1				
9	5YU–83922–10	LEVER 2	1	1				
10	4HM–83980–00	FRONT STOP SWITCH ASSY	1	1				
11	5VS–2585H–00	SCREW,SET	1	1				
12	5YU–25867–10	BRACKET, MASTER CYLINDER	1	1				
13	5VS–26332–00	BOLT	2	2				
14	2H9–23469–00	CAP, BOLT	2	2				
15	5YU–26259–00	COLLAR	1	1				
16	5YU–23857–00	HOLDER	1	1				
17	90111–06065	BOLT,HEX. SOCKET BUTTON	1	1				
18	5YU–25872–10	HOSE, BRAKE 1	1	1				
19	90105–060A0	BOLT, FLANGE	1	1				
20	90401–10172	BOLT, UNION	3	3				
21	90430–10005	GASKET	6	6				

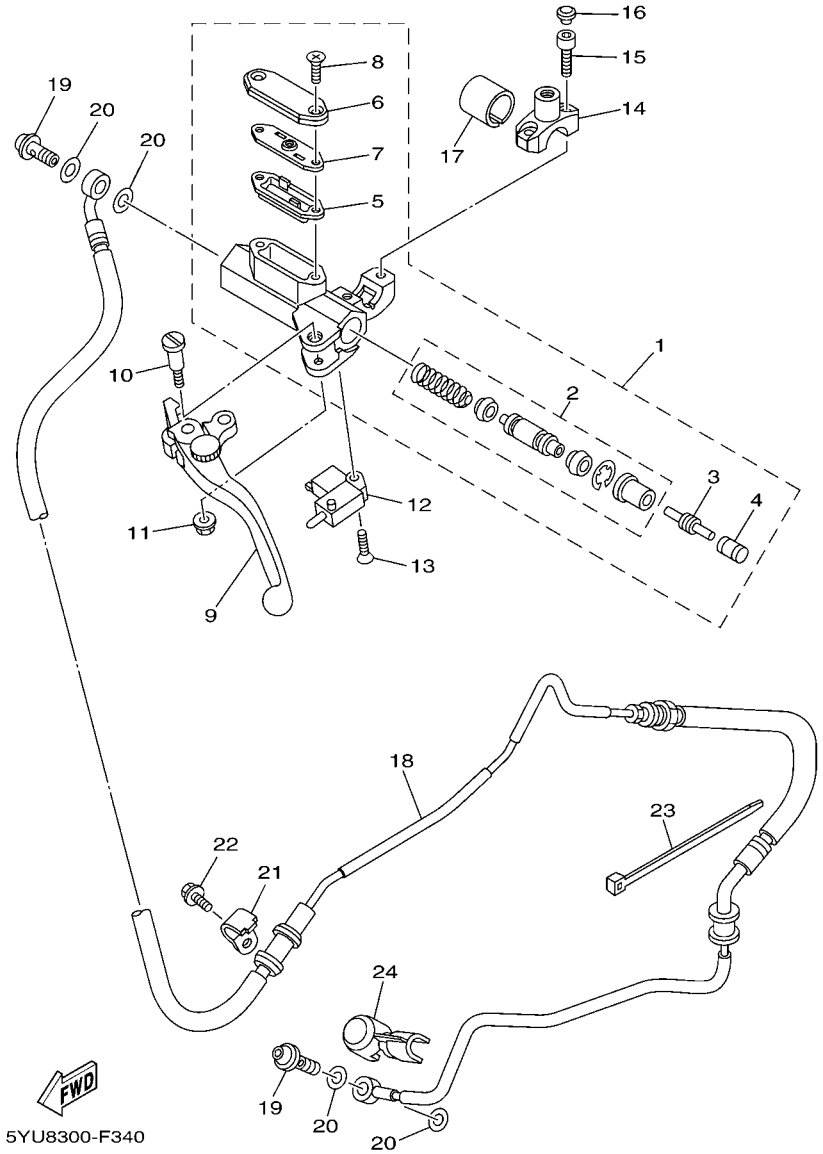

FIG. 34 FRONT MASTER CYLINDER 2

REF. NO.	PART NO.	DESCRIPTION	5YU8	5YUB				REMARKS
1	5YU–W2645–10	MASTER CYLINDER SUB ASSY	1	1				
2	5YU–W0099–00	.CYLINDER KIT, MASTER (CLUTCH)	1	1				
3	5YU–26464–00	.ROD, PUSH	1	1				
4	3GM–26455–00	.BUSH	1	1				
5	5YU–25854–50	.DIAPHRAGM, RESERVOIR	1	1				
6	5YU–25852–50	.CAP, RESERVOIR	1	1				
7	5YU–25855–50	.BUSH,DIAPHRAGM	1	1				
8	98707–04012	.SCREW, FLAT HEAD	2	2				
9	5YU–83912–10	LEVER 1	1	1				
10	3FV–2589F–00	BOLT, LEVER	1	1				
11	95707–06500	NUT, FLANGE	1	1				
12	3GM–83980–00	SWITCH	1	1				
13	98707–04016	SCREW, FLAT HEAD	1	1				
14	5YU–26393–10	HOLDER	1	1				
15	5YU–26332–00	BOLT	2	2				
16	2H9–23469–00	CAP, BOLT	2	2				
17	90387–224L9	COLLAR	1	1				
18	5YU–26470–00	HOSE, CLUTCH	1	1				
19	90401–10172	BOLT, UNION	2	2				
20	90201–10118	WASHER, PLATE	4	4				
21	5YU–26475–00	HOLDER	1	1				
22	95027–06010	BOLT, FLANGE	1	1				
23	5Y9–12491–00	CLAMP 1	2	2				
24	5YU–26477–00	COVER	1	1				

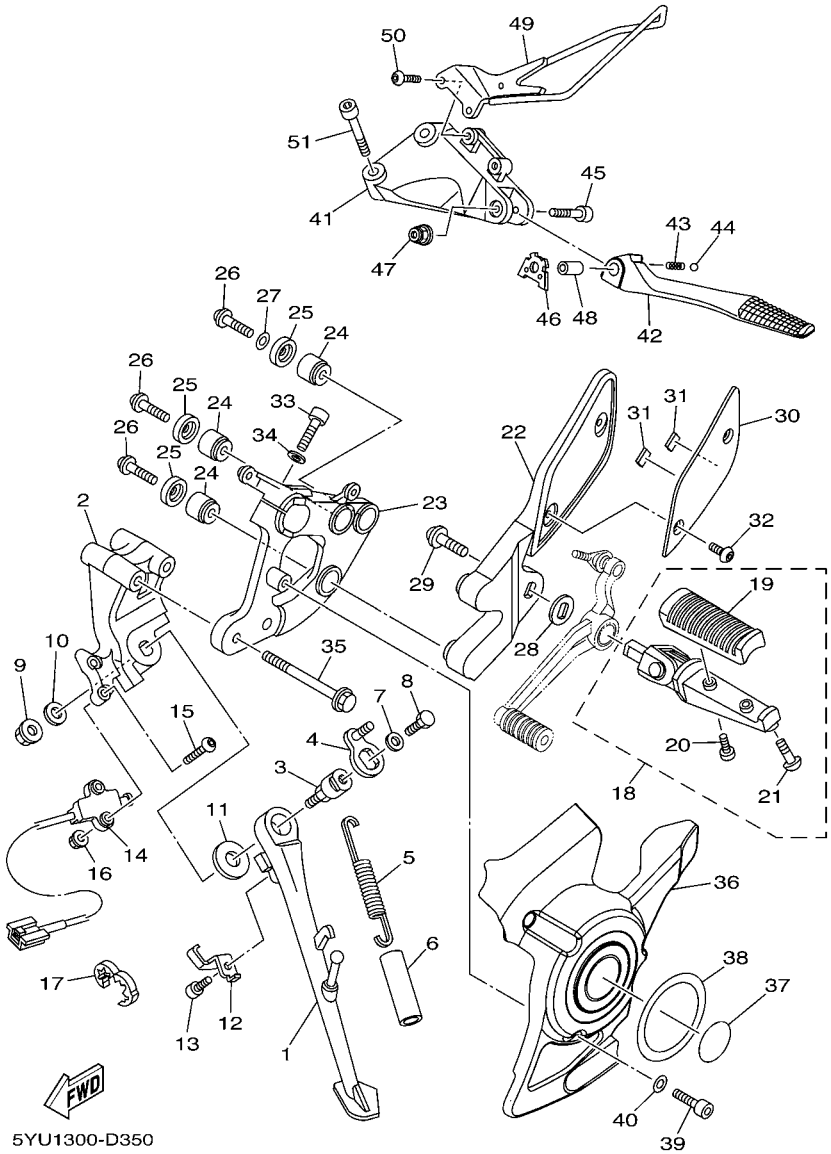

FIG. 35 STAND & FOOTREST

REF. NO.	PART NO.	DESCRIPTION	5YU8	5YUB				REMARKS
1	5YU–27311–00	STAND, SIDE	1	1				
2	5YU–27321–00	BRACKET, SIDE STAND	1	1				
3	4NX–27351–00	GUIDE, SIDE STAND	1	1				
4	5PW–27352–00	HOOK, SIDE STAND	1	1				
5	90506–18008	SPRING, TENSION	1	1				
6	90445–19002	HOSE (L60)	1	1				
7	90201–081R9	WASHER, PLATE	1	1				
8	90101–08662	BOLT	1	1				
9	95607–10200	NUT, U FLANGE	1	1				
10	90201–101J1	WASHER, PLATE	1	1				
11	90201–146F9	WASHER, PLATE	1	1				
12	5YU–27315–00	LINK, SIDE STAND	1	1				
13	91317–06012	BOLT	1	1				
14	5YU–82566–01	SWITCH, SIDE STAND	1	1				
15	92017–05030	BOLT, BUTTON HEAD	2	2				
16	95607–05200	NUT, U FLANGE	2	2				
17	90464–13227	CLAMP	1	1				
18	5YU–27410–00	FRONT FOOTREST ASSY (LEFT)	1	1				
19	4BP–27413–00	.COVER, FOOTREST	1	1				
20	90157–05079	.SCREW, PAN HEAD	2	2				
21	90109–083E0	.BOLT	1	1				
22	5YU–27442–20	BRACKET 2	1	1				
23	5YU–274A3–20	BEACKET,ADAPTER 1	1	1				
24	1NL–27424–00	DAMPER, FOOTREST 2	3	3				
25	90209–08295	WASHER	3	3				
26	90110–08220	BOLT, HEXAGON SOCKET HEAD	3	3				
27	90201–08085	WASHER, PLATE	1	1				

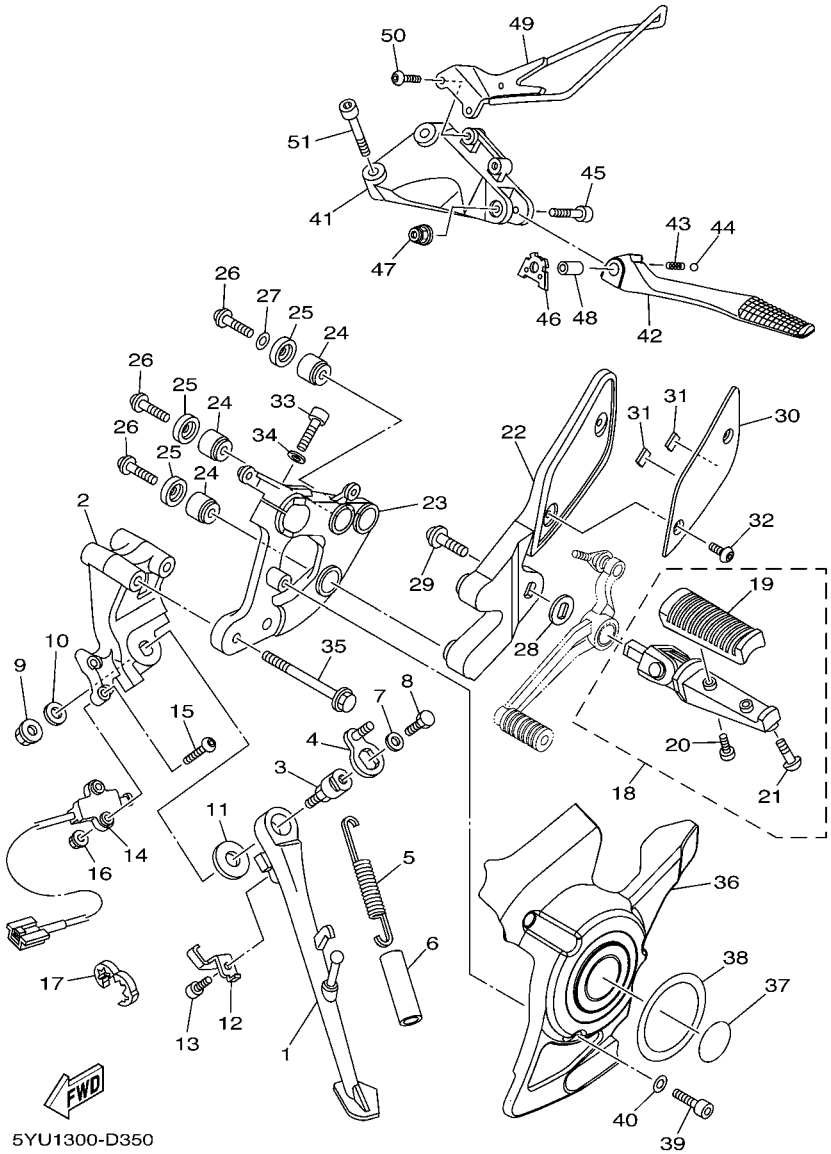

FIG. 35 STAND & FOOTREST

REF. NO.	PART NO.	DESCRIPTION	5YU8	5YUB				REMARKS
28	90214–13002	WASHER, CLAW	1	1				
29	90109–103A9	BOLT	1	1				
30	5YU–27487–00	COVER 2	1	1				
31	1HX–27415–00	PLATE, DAMPER	2	2				
32	90111–05015	BOLT,HEX. SOCKET BUTTON	2	2				
33	91314–08040	BOLT	1	1				
34	90201–083P5	WASHER, PLATE	1	1				
35	90105–08095	BOLT, FLANGE	2	2				
36	5YU–27413–20	COVER, FOOTREST	1	1				
37	5YU–27446–00	PLATE 2	1	1				
38	5YU–27446–10	PLATE 2	1	1				
39	91314–06016	BOLT	3	3				
40	90201–06431	WASHER, PLATE	3	3				
41	5YU–2741L–00	BRACKET 4	1	1				
42	5YU–27431–00	FOOTREST, REAR 1	1	1				
43	90501–15001	SPRING, COMPRESSION	1	1				
44	93501–04011	BALL	1	1				
45	91314–06040	BOLT	1	1				
46	5YU–27437–00	WASHER, SPECIAL	1	1				
47	95604–06200	NUT, U FLANGE	1	1				
48	90387–06014	COLLAR	1	1				
49	5YU–22361–00	GUARD 1	1	1				
50	90149–06270	SCREW	2	2				
51	90110–08220	BOLT, HEXAGON SOCKET HEAD	2	2				

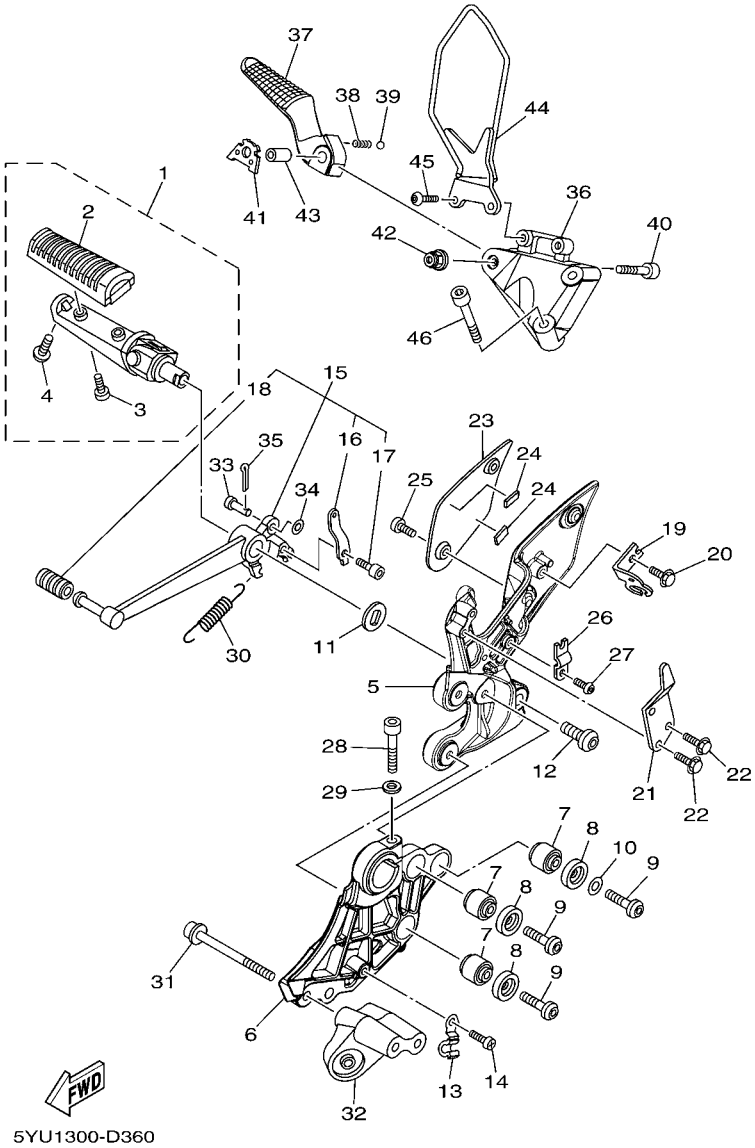

FIG. 36 STAND & FOOTREST 2

REF. NO.	PART NO.	DESCRIPTION	5YU8	5YUB				REMARKS
1	5YU–27420–00	FRONT FOOTREST ASSY (RIGHT)	1	1				
2	4BP–27413–00	.COVER, FOOTREST	1	1				
3	90157–05079	.SCREW, PAN HEAD	2	2				
4	90109–083E0	.BOLT	1	1				
5	5YU–27443–20	BRACKET 3	1	1				
6	5YU–274A4–20	BRACKET,ADAPTER 2	1	1				
7	1NL–27424–00	DAMPER, FOOTREST 2	3	3				
8	90209–08295	WASHER	3	3				
9	90110–08220	BOLT, HEXAGON SOCKET HEAD	3	3				
10	90201–08085	WASHER, PLATE	1	1				
11	90214–13002	WASHER, CLAW	1	1				
12	90109–103A9	BOLT	1	1				
13	5YU–27268–00	CLIP, WIRE	1	1				
14	98507–06010	SCREW, PAN HEAD	1	1				
15	5YU–27200–00	PEDAL, BRAKE	1	1				
16	5YU–27275–00	.PLATE	1	1				
17	91317–06010	.BOLT	1	1				
18	5YU–27854–00	.COVER, PEDAL	1	1				
19	5YU–2144G–00	STAY, STOP SWITCH	1	1				
20	95027–06010	BOLT, FLANGE	1	1				
21	5YU–27445–00	PLATE 1	1	1				
22	90105–06050	BOLT, FLANGE	2	2				
23	5YU–27486–00	COVER 1	1	1				
24	1HX–27415–00	PLATE, DAMPER	2	2				
25	90111–05015	BOLT,HEX. SOCKET BUTTON	2	2				
26	5YU–27264–00	BRACKET 2	1	1				
27	92017–06010	BOLT, BUTTON HEAD	1	1				

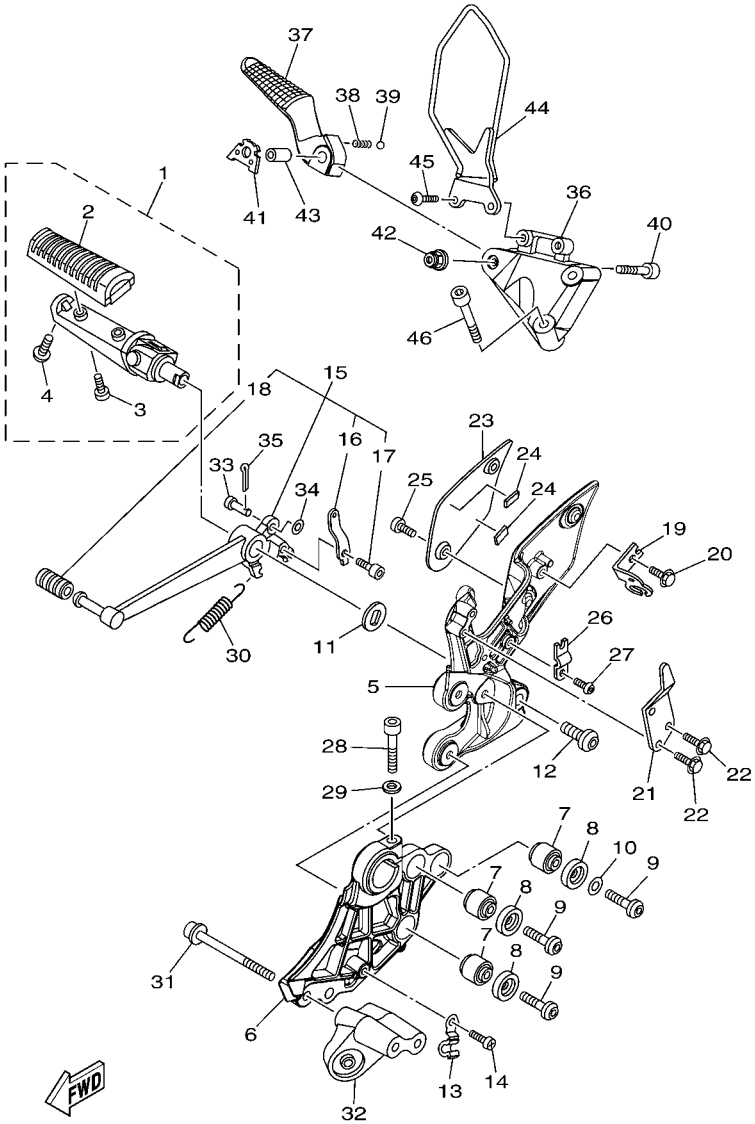

FIG. 36 STAND & FOOTREST 2

REF. NO.	PART NO.	DESCRIPTION	5YU8	5YUB				REMARKS
28	91314–08040	BOLT	1	1				
29	90201–083P5	WASHER, PLATE	1	1				
30	90506–20014	SPRING, TENSION	1	1				
31	90110–08049	BOLT, HEXAGON SOCKET HEAD	2	2				
32	5YU–27401–00	BRACKET,FOOTREST 1	1	1				
33	91701–06018	PIN, CLEVIS	1	1				
34	92907–06200	WASHER	1	1				
35	91401–16012	PIN, COTTER	1	1				
36	5YU–2742L–00	BRACKET 5	1	1				
37	5YU–27441–00	FOOTREST, REAR 2	1	1				
38	90501–15001	SPRING, COMPRESSION	1	1				
39	93501–04011	BALL	1	1				
40	91314–06040	BOLT	1	1				
41	5YU–27437–00	WASHER, SPECIAL	1	1				
42	95604–06200	NUT, U FLANGE	1	1				
43	90387–06014	COLLAR	1	1				
44	5YU–22362–00	GUARD 2	1	1				
45	90149–06270	SCREW	2	2				
46	90110–08220	BOLT, HEXAGON SOCKET HEAD	2	2				

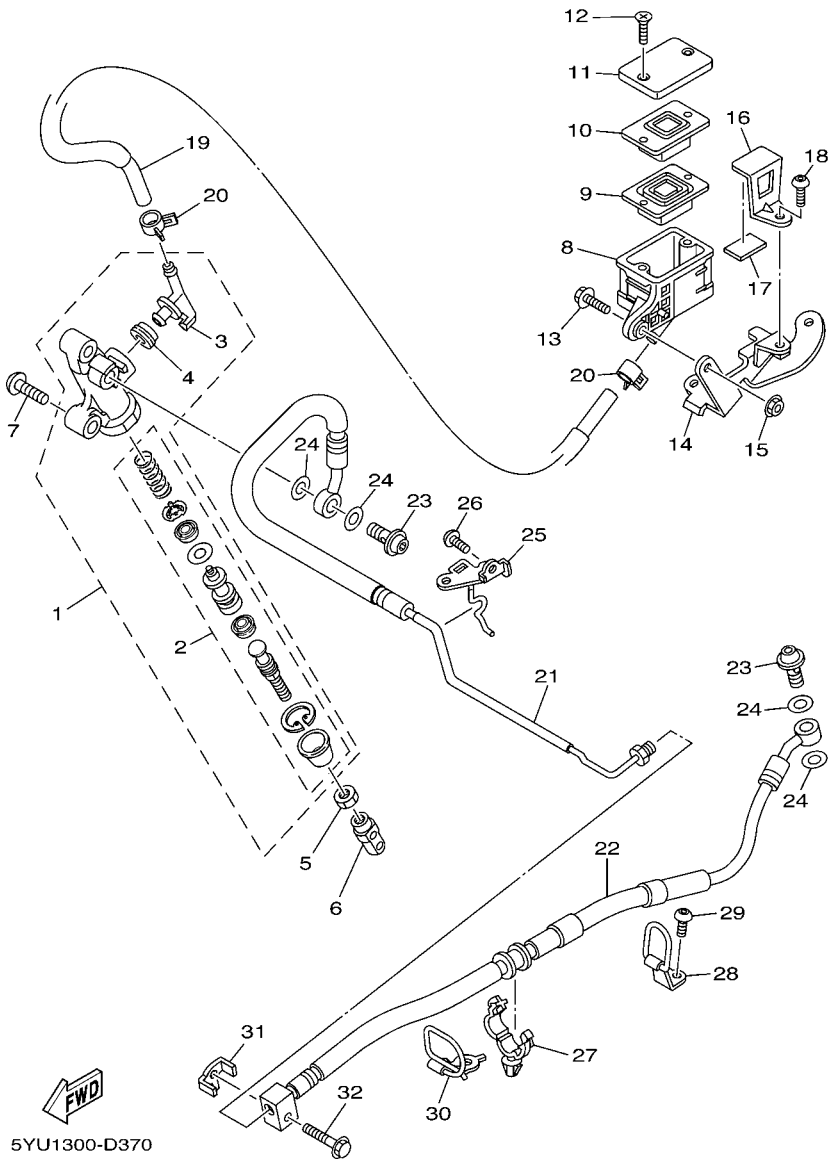

FIG. 37 REAR MASTER CYLINDER

REF. NO.	PART NO.	DESCRIPTION	5YU8	5YUB				REMARKS
1	5YU–2583V–00	RR. MASTER CYLINDER ASSY.	1	1				
2	5VS–W0042–50	.CYLINDER KIT, MASTER	1	1				
3	5YU–2582A–00	.JOINT	1	1				
4	4BP–2585F–00	.BUSH	1	1				
5	90170–08010	NUT	1	1				
6	5SL–27222–00	JOINT	1	1				
7	90111–08022	BOLT,HEX. SOCKET BUTTON	2	2				
8	5YU–25894–00	TANK, RESERVOIR	1	1				
9	55U–25854–00	DIAPHRAGM, RESERVOIR	1	1				
10	3GM–2585B–20	PLATE, DIAPHRAGM	1	1				
11	5YU–25852–00	CAP, RESERVOIR	1	1				
12	98706–04040	SCREW, FLAT HEAD	2	2				
13	95027–06016	BOLT, FLANGE	1	1				
14	5YU–2164F–00	STAY 1	1	1				
15	95707–06500	NUT, FLANGE	1	1				
16	5YU–2164G–00	STAY 2	1	1				
17	5YU–21639–00	DAMPER 2	1	1				
18	92017–06010	BOLT, BUTTON HEAD	1	1				
19	5YU–25895–00	HOSE, RESERVOIR	1	1				
20	90467–12191	CLIP	2	2				
21	5YU–2581J–00	HOSE, BRAKE 4	1	1				
22	5YU–2581K–00	HOSE, BRAKE 5	1	1				
23	90401–10172	BOLT, UNION	2	2				
24	90430–10005	GASKET	4	4				
25	5YU–25886–00	HOLDER, BRAKE HOSE	1	1				
26	95027–06010	BOLT, FLANGE	1	1				
27	90464–18002	CLAMP	1	1				

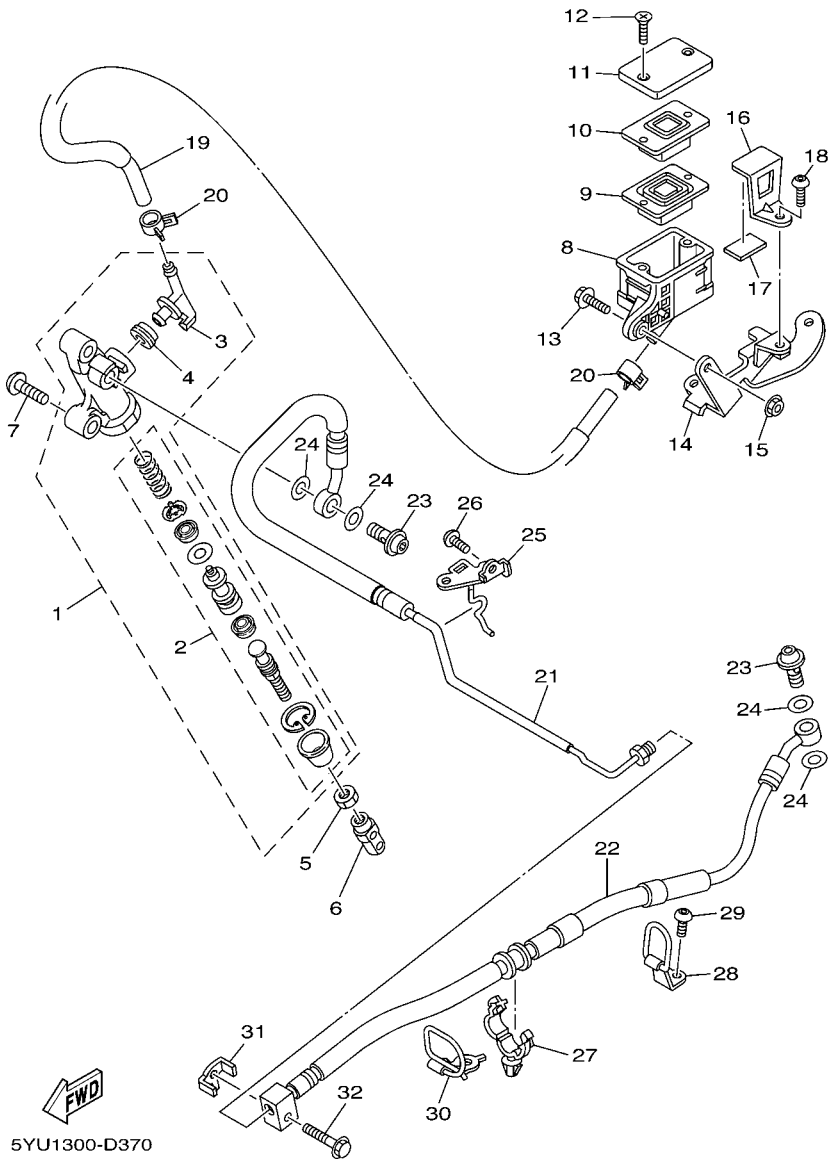

FIG. 37 REAR MASTER CYLINDER

REF. NO.	PART NO.	DESCRIPTION	5YU8	5YUB				REMARKS
28	5YU–2588F–00	HOLDER, BRAKE HOSE 5	1	1				
29	90111–06062	BOLT,HEX. SOCKET BUTTON	1	1				
30	5YU–2588G–00	HOLDER, BRAKE HOSE 6	1	1				
31	5YU–25887–00	HOLDER, BRAKE HOSE	1	1				
32	95027–06030	BOLT, FLANGE	1	1				

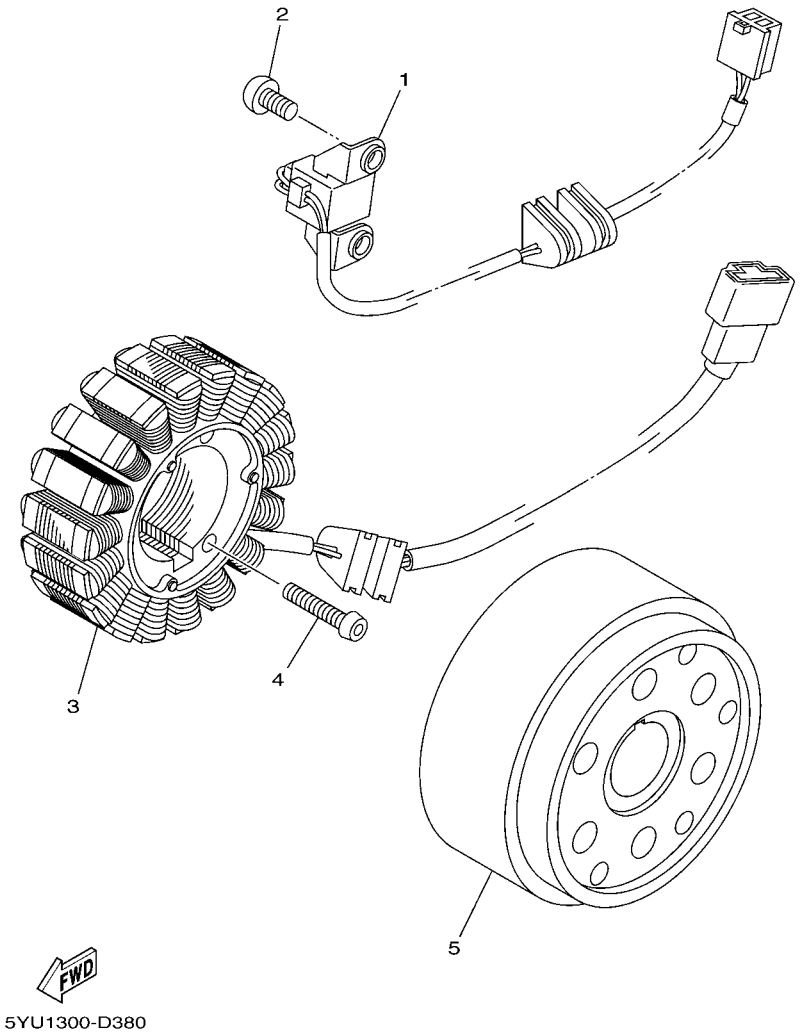

FIG. 38 GENERATOR

REF. NO.	PART NO.	DESCRIPTION	5YU8	5YUB				REMARKS
1	5YU–81670–00	PICK-UP ASSY	1	1				
2	90149–06057	SCREW	2	2				
3	5YU–81410–00	STATOR ASSY	1	1				
4	90149–06019	SCREW	3	3				
5	5PX–81450–01	ROTOR ASSY	1	1				

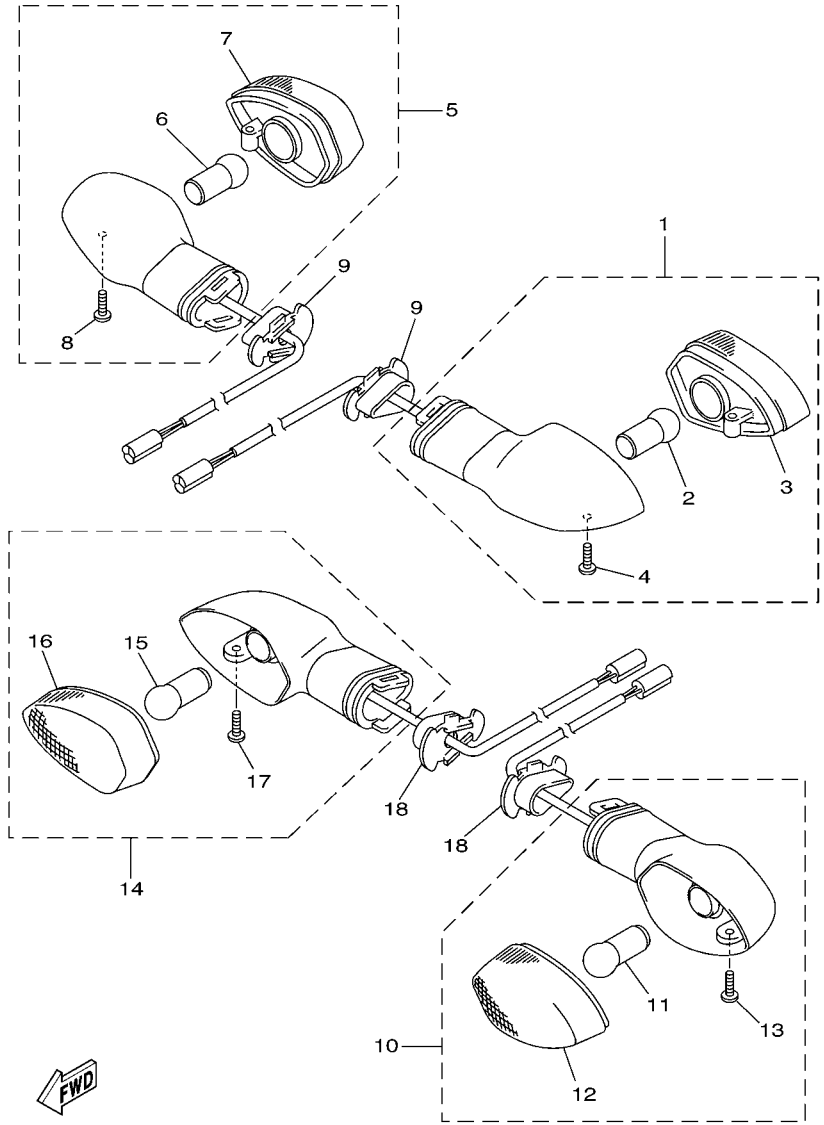

5YU1300-D390

FIG. 39 FLASHER LIGHT

REF. NO.	PART NO.	DESCRIPTION	5YU8	5YUB				REMARKS
1	5YU–83330–00	REAR FLASHER LIGHT ASSY 1	1	1				
2	1KH–83311–00	.BULB (12V-10W)	1	1				
3	5PW–8334A–00	.LENS COMP	1	1				
4	97706–04012	.SCREW, TAPPING	1	1				
5	5YU–83340–00	REAR FLASHER LIGHT ASSY 2	1	1				
6	1KH–83311–00	.BULB (12V-10W)	1	1				
7	5PW–8333A–00	.LENS COMP	1	1				
8	97706–04012	.SCREW, TAPPING	1	1				
9	5PW–83318–00	STAY, FLASHER 1	2	2				
10	5YU–83310–00	FRONT FLASHER LIGHT ASSY 1	1	1				
11	1KH–83311–00	.BULB (12V-10W)	1	1				
12	5PW–8333A–00	.LENS COMP	1	1				
13	97706–04012	.SCREW, TAPPING	1	1				
14	5PW–83320–01	FRONT FLASHER LIGHT ASSY 2	1	1				
15	1KH–83311–00	.BULB (12V-10W)	1	1				
16	5PW–8334A–00	.LENS COMP	1	1				
17	97706–04012	.SCREW, TAPPING	1	1				
18	5PW–83318–00	STAY, FLASHER 1	2	2				

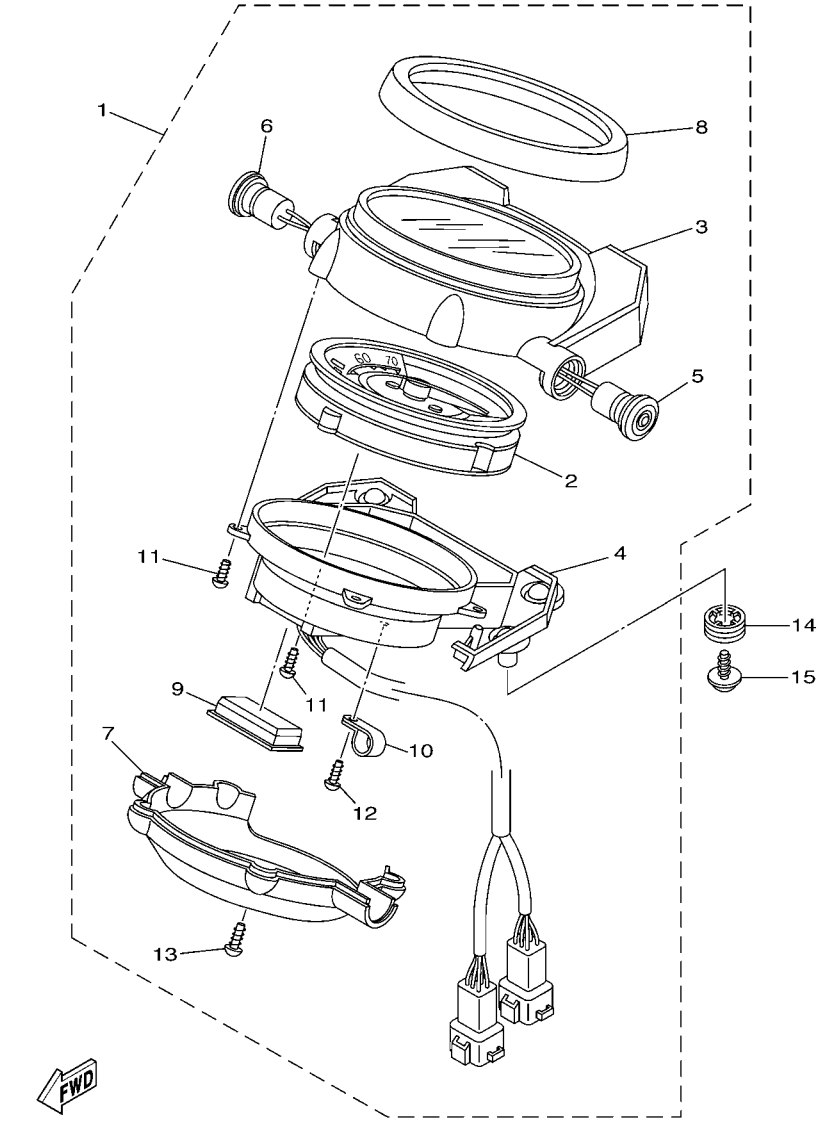

5YU1300-D400

FIG. 40 METER

REF. NO.	PART NO.	DESCRIPTION	5YU8	5YUB				REMARKS
1	5YU–83500–40	METER ASSY (KM/H)	1					SMX(EXCEPT GBR)
	5YU–83500–50	METER ASSY (MPH)	1					SMX(FOR GBR)
	5YU–83500–21	METER ASSY (KM/H)	1	1				BWC1(EXCEPT GBR)
	5YU–83500–31	METER ASSY (MPH)	1	1				BWC1(FOR GBR)
2	5YU–83570–02	.SPEEDOMETER ASSY (KM/H)	1	1				UR EXCEPT FOR GBR
	5YU–83570–12	.SPEEDOMETER ASSY (MPH)	1	1				UR FOR GBR
3	5YU–8353E–20	.CASE, METER UPPER	1	1				
4	5YU–83572–00	.CASE, SPEEDOMETER LOWER	1	1				
5	5YU–8358J–00	.SWITCH, METER CONTROL	1	1				
6	5YU–8358J–10	.SWITCH, METER CONTROL	1	1				
7	5YU–83559–40	.COVER, METER	1					UR FOR SMX
	5YU–83559–00	.COVER, METER	1	1				UR FOR BWC1,DRMK
8	5YU–83506–40	.RING, METER COVER	1					UR FOR SMX
	5YU–83506–00	.RING, METER COVER	1	1				UR FOR BWC1,DRMK
9	5UX–8352K–00	.PLUG, BLIND	1	1				
10	5EL–8357E–00	.CLAMP	1	1				
11	97707–30014	.SCREW, TAPPING	12	12				
12	90164–04023	.SCREW, TAPPING	1	1				
13	5YU–83616–00	.SCREW, TAPPING	1	1				
14	5PS–83513–00	DAMPER	4	4				
15	90164–05014	SCREW, TAPPING	4	4				

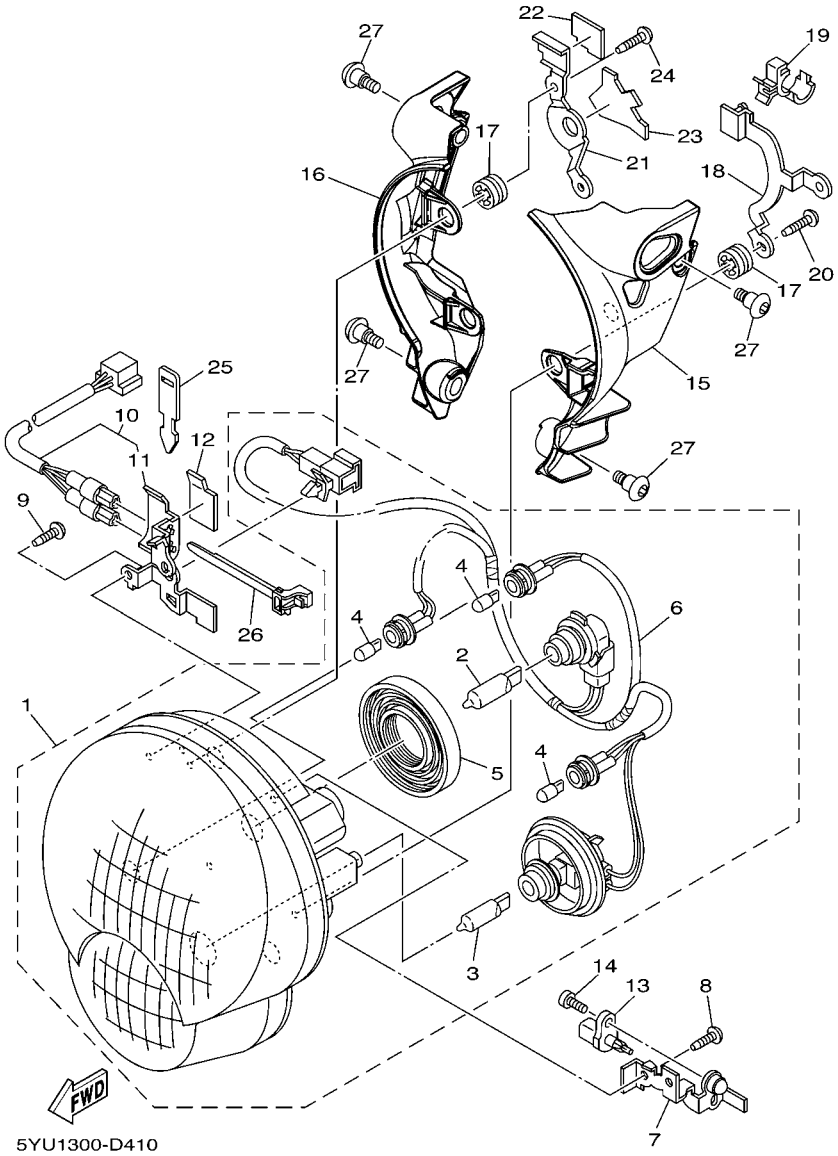

FIG. 41 HEADLIGHT

REF. NO.	PART NO.	DESCRIPTION	5YU8	5YUB				REMARKS
1	5YU–84300–30	HEADLIGHT ASSY	1					UR FOR SMX
	5YU–84300–01	HEADLIGHT ASSY	1	1				UR FOR BWC1,DRMK
2	5YU–84314–00	.BULB, HEADLIGHT (12V-51W HB4)	1	1				
3	5PS–84314–00	.BULB (12V-55W H7)	1	1				HALOGEN
4	5DM–84347–00	.BULB (12V-5W)	3	3				
5	5YU–84397–00	.COVER, SOCKET	1	1				
6	5YU–84359–00	.CORD, HEADLIGHT	1	1				
7	5YU–28366–00	BRACKET	1	1				
8	97707–50012	SCREW, TRUSS HEAD TAPPING	1	1				
9	97707–50012	SCREW, TRUSS HEAD TAPPING	2	2				
10	5YU–82509–30	WIRE, SUB LEAD	1	1				
11	5YU–28367–00	.BRACKET	1	1				
12	5YU–28307–00	SEAL	1	1				
13	5YU–85886–00	SENSOR, AIR TEMPERATURE	1	1				
14	98507–05012	SCREW, PAN HEAD	1	1				
15	5YU–2831V–20	STAY, HEAD LIGHT 1	1	1				
16	5YU–2832V–20	STAY, HEAD LIGHT 2	1	1				
17	5PS–83513–00	DAMPER	4	4				
18	5YU–8431R–00	STAY, SETTING	1	1				
19	90464–15192	CLAMP	1	1				
20	97707–50014	SCREW, TRUSS HEAD TAPPING	2	2				
21	5YU–2831F–00	STAY, GUIDE 2	1	1				
22	5YU–2834V–00	PROTECTOR 1	1	1				
23	5YU–2834W–00	PROTECTOR 2	1	1				
24	97707–50014	SCREW, TRUSS HEAD TAPPING	2	2				
25	5YU–82591–00	BAND	1	1				
26	90464–15200	CLAMP	1	1				

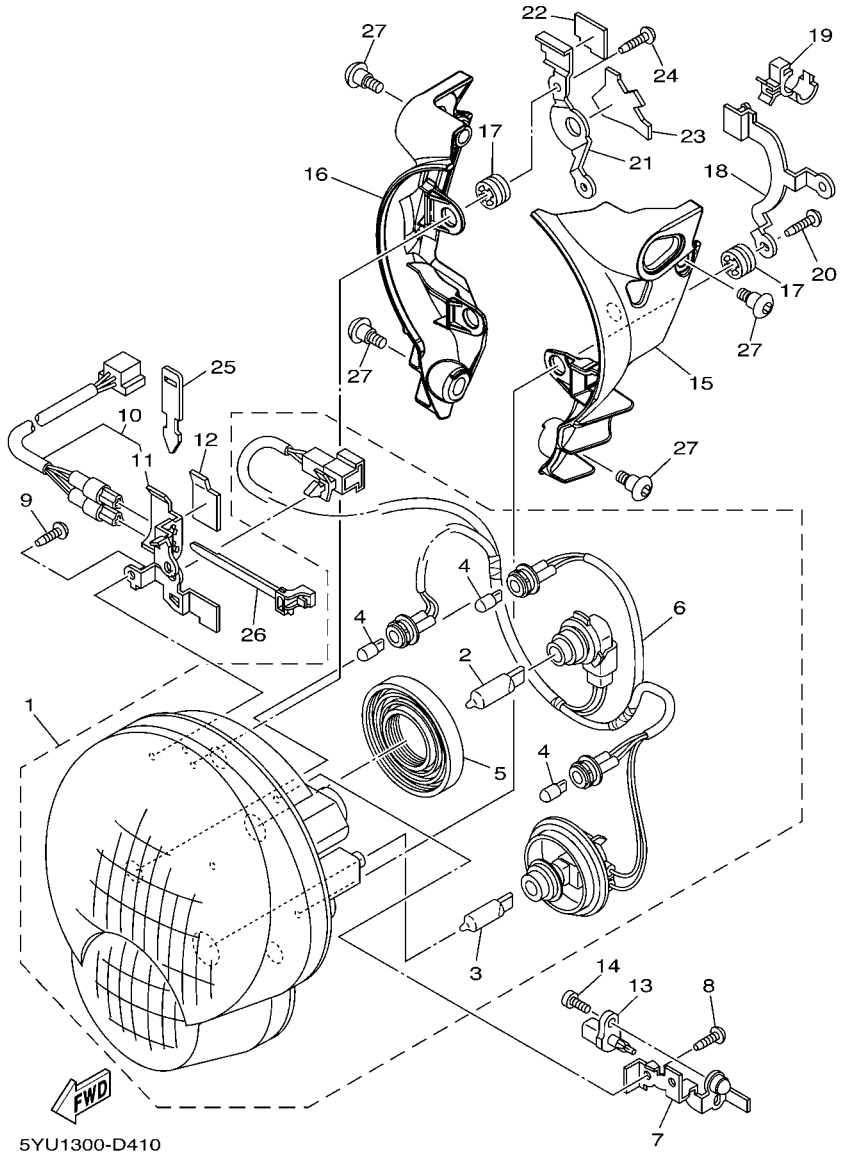

FIG. 41 HEADLIGHT

REF. NO.	PART NO.	DESCRIPTION	5YU8	5YUB				REMARKS
27	90109–06078	BOLT	4	4				

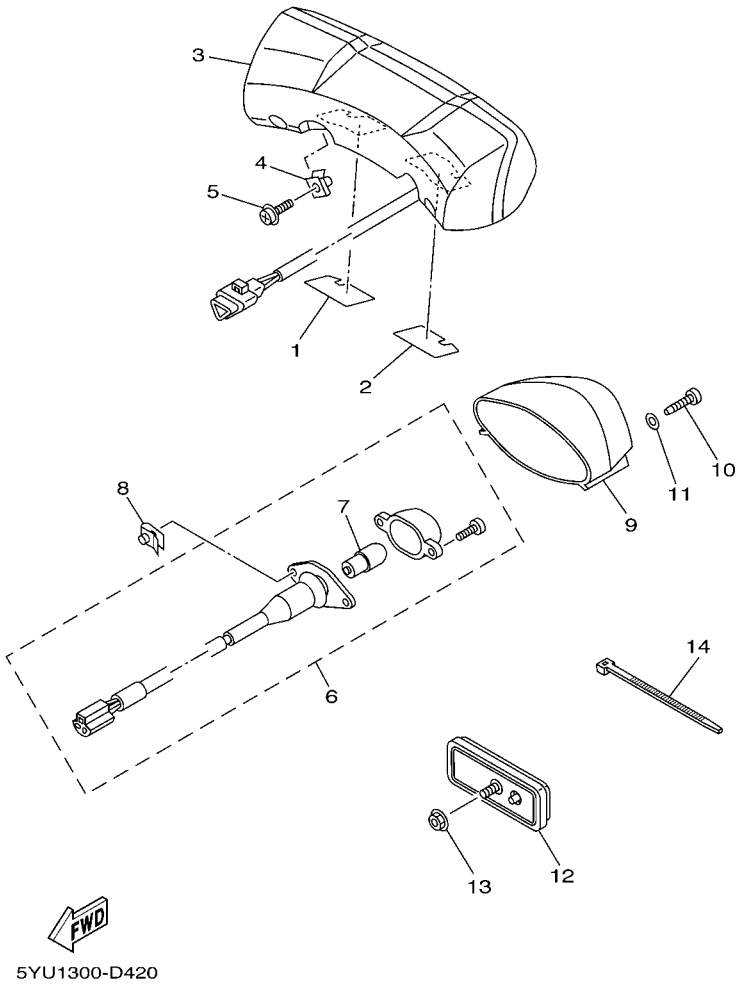

FIG. 42 TAILLIGHT

REF. NO.	PART NO.	DESCRIPTION	5YU8	5YUB				REMARKS
1	5YU–21655–00	PATCH 1	1	1				
2	5YU–21656–00	PATCH 2	1	1				
3	5YU–84710–00	TAILLIGHT UNIT ASSY	1	1				
4	90183–05061	NUT, SPRING	2	2				
5	90159–05083	SCREW, WITH WASHER	2	2				
6	5YU–84740–00	LICENCE LIGHT ASSY	1	1				
7	5DM–84347–00	.BULB (12V-5W)	1	1				
8	90183–04039	NUT, SPRING	2	2				
9	5YU–84747–00	COVER, LICENCE LIGHT	1	1				
10	90167–05010	SCREW, TAPPING	2	2				
11	90201–05018	WASHER, PLATE	2	2				
12	3Y6–85130–02	REAR REFLECTOR ASSY	1	1				
13	95607–05200	NUT, U FLANGE	1	1				
14	1UA–82591–00	BAND	1	1				

FIG. 43 HANDLE SWITCH & LEVER

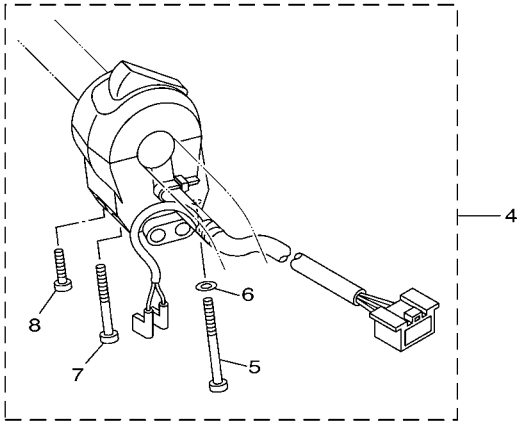

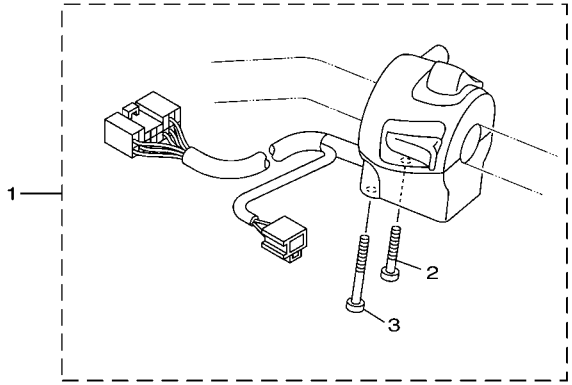

5YU1300-D430

REF. NO.	PART NO.	DESCRIPTION	5YU8	5YUB				REMARKS
1	5YU–83969–01	SWITCH, HANDLE 5	1	1				
2	98507–05030	.SCREW, PAN HEAD	1	1				
3	98507–05045	.SCREW, PAN HEAD	1	1				
4	5YU–83975–01	SWITCH, HANDLE 2	1	1				
5	98507–05055	.SCREW, PAN HEAD	1	1				
6	92907–05600	.WASHER, PLATE	1	1				
7	98507–05045	.SCREW, PAN HEAD	1	1				
8	98507–05020	.SCREW, PAN HEAD	1	1				

FIG. 44 ELECTRICAL 1

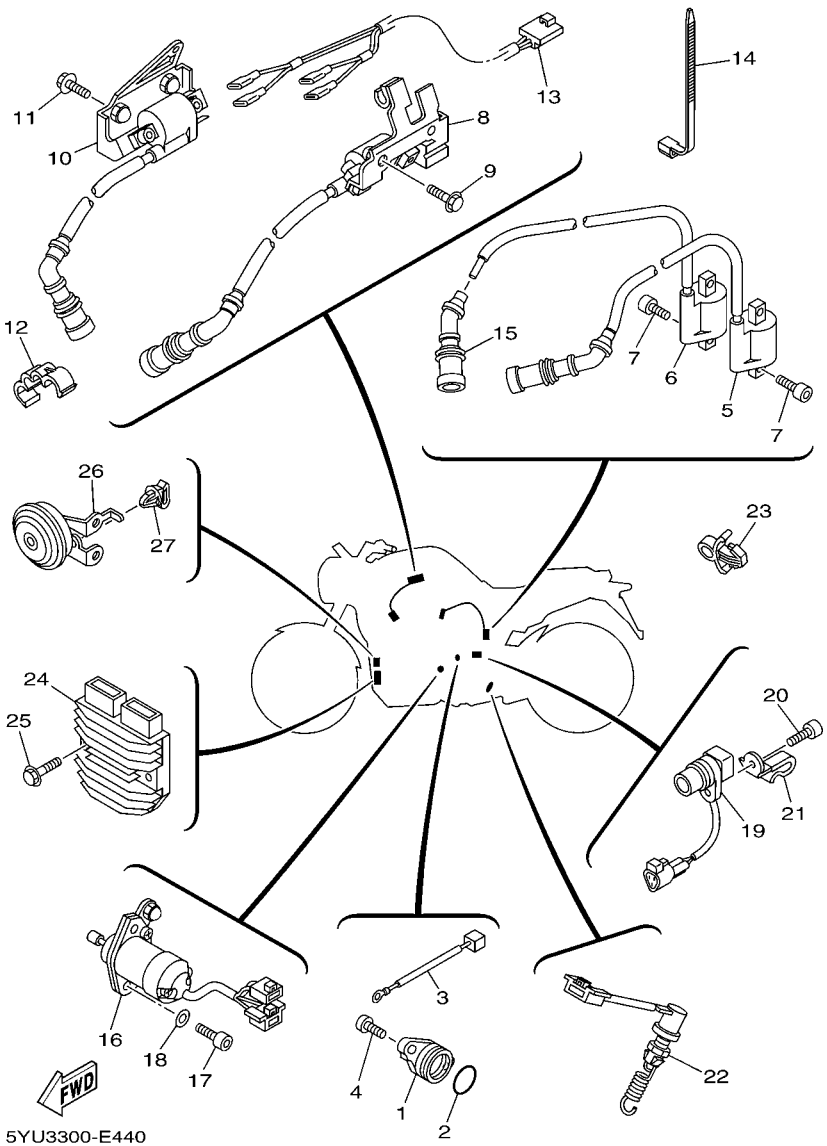

REF. NO.	PART NO.	DESCRIPTION	5YU8	5YUB				REMARKS
1	1AE–82540–00	NEUTRAL SWITCH ASSY	1	1				
2	93210–29196	O-RING	1	1				
3	5YU–82509–00	WIRE, SUB LEAD	1	1				
4	90149–06040	SCREW	2	2				
5	5YU–82303–01	IGNITION COIL SUB ASSY 3	1	1				
6	5YU–82310–00	IGNITION COIL ASSY	1	1				
7	91380–06016	BOLT	4	4				
8	5YU–82301–00	IGNITION COIL SUB ASSY 1	1	1				
9	95027–06016	BOLT, FLANGE	2	2				
10	5YU–82302–00	IGNITION COIL SUB ASSY 2	1	1				
11	95027–06016	BOLT, FLANGE	2	2				
12	90464–10233	CLAMP	1	1				
13	5YU–82509–20	WIRE, SUB LEAD	1	1				
14	90464–13073	CLAMP	1	1				
15	4NK–82370–00	PLUG CAP ASSY	1	1				
16	5YU–86110–00	SOLENOID	1	1				
17	90110–06061	BOLT, HEXAGON SOCKET HEAD	2	2				
18	90202–06002	WASHER, PLATE	2	2				
19	5YU–83755–01	SENSOR, SPEED	1	1				
20	91314–06014	BOLT	1	1				
21	90465–08127	CLAMP	1	1				
22	5YU–82530–00	STOP SWITCH ASSY	1	1				
23	90464–48174	CLAMP	1	1				
24	5YU–81960–00	RECTIFIER & REGULATOR ASSY	1	1				
25	90105–06009	BOLT, FLANGE	2	2				
26	5YU–83371–00	HORN	1	1				
27	90464–07011	CLAMP	1	1				

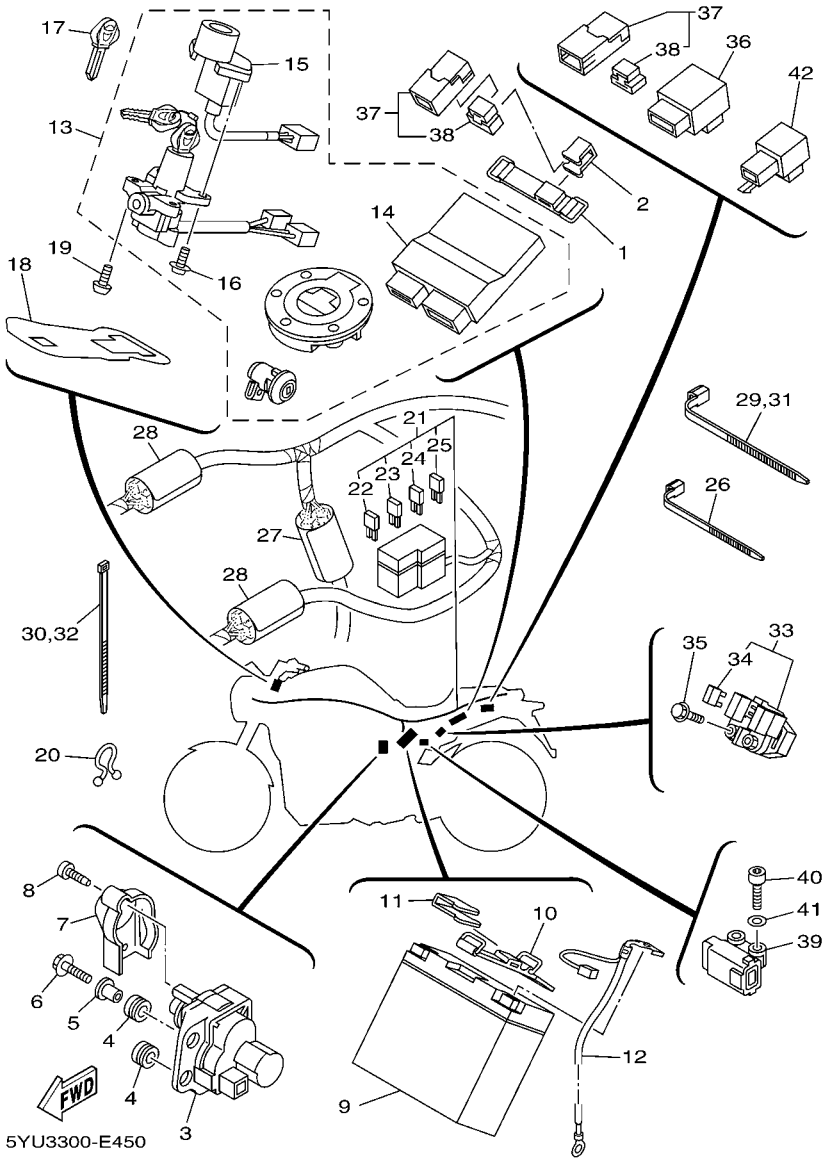

FIG. 45 ELECTRICAL 2

REF. NO.	PART NO.	DESCRIPTION	5YU8	5YUB				REMARKS
1	5YU–82131–00	BAND, BATTERY	1	1				
2	5YU–2162A–00	HOOK	1	1				
3	5YU–85820–00	SERVO MOTOR ASSY	1	1				
4	90480–14604	GROMMET	2	2				
5	90387–06M60	COLLAR	1	1				
6	95027–06020	BOLT, FLANGE	1	1				
7	5VY–85829–00	COVER, SERVO MOTOR	1	1				
8	97707–50514	SCREW, TAPPING	2	2				
9	5EA–82100–11	BATTERY ASSY (GS GT14B-4)	1	1				
10	5YU–82137–00	BAND, BATTERY	1	1				
11	5YU–2162A–00	HOOK	1	1				
12	5YU–82116–00	WIRE, MINUS LEAD	1	1				
13	5YU–W8250–20	MAIN SW. IMMOBILIZER KIT	1	1				
14	5YU–8591A–20	.ENGINE CONTROL UNIT ASSY	1	1				
15	5YU–8255P–00	.IMMOBILIZER. UNIT COMP.	1	1				
16	5SL–82113–00	.SCREW	2	2				
17	5SL–82511–08	BLANK KEY	1	1				AP
18	5YU–82568–00	COVER, MAIN SWITCH	1	1				
19	90149–08230	SCREW	2	2				
20	90464–18116	CLAMP	1	1				
21	5YU–82590–30	WIRE HARNESS ASSY	1	1				
22	5JJ–82151–70	.FUSE (25A-BL)	2	2				
23	5JJ–82151–30	.FUSE (10A-BL)	5	5				
24	5JJ–82151–10	.FUSE (15A-BL)	4	4				
25	5JW–82151–10	.FUSE (50A)	1	1				
26	90464–35132	CLAMP	2	2				
27	5YU–82589–10	PROTECTER, WIRE HARNESS	1	1				

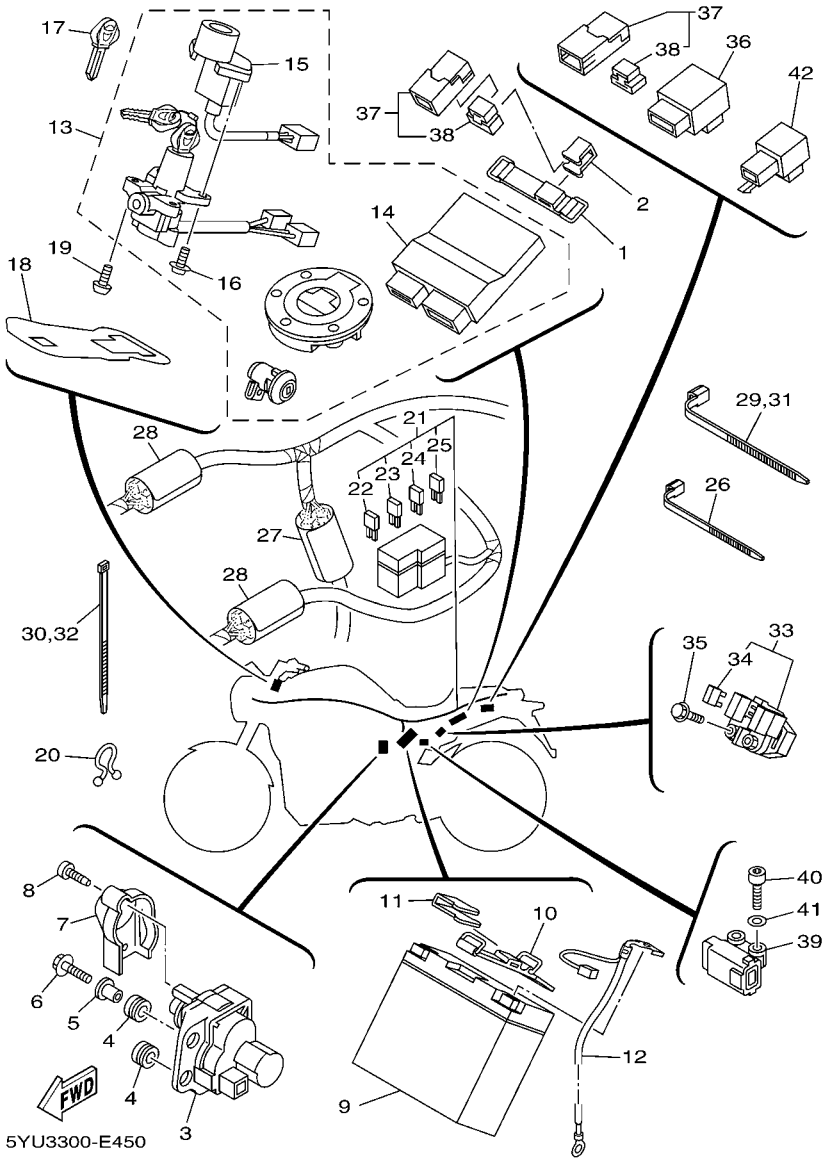

FIG. 45 ELECTRICAL 2

REF. NO.	PART NO.	DESCRIPTION	5YU8	5YUB				REMARKS
28	5UX–82589–00	PROTECTER, WIRE HARNESS	2	2				
29	90464–13073	CLAMP	1	1				
30	1UA–82591–00	BAND	1	1				
31	90464–13073	CLAMP	1	1				
32	1UA–82591–00	BAND	1	1				
33	1D0–81940–02	STARTER RELAY ASSY	1	1				
34	36Y–82151–00	.FUSE (15A-BL)	2	2				
35	95027–06008	BOLT, FLANGE	2	2				
36	5VK–81950–30	RELAY ASSY	1	1				
37	5EA–81950–20	RELAY ASSY	2	2				
38	5EA–81952–00	.HOLDER, RELAY	1	1				
39	5PS–82576–01	LEAN ANGLE SENSOR	1	1				
40	91317–04025	BOLT	2	2				
41	90201–042E0	WASHER, PLATE	2	2				
42	5YU–83350–00	FLASHER RELAY ASSY	1	1				

PART NO.	GRID NO.
5YU–11102–10	B – 2
5YU–11103–10	B – 2
5YU–1110M–10	B – 4
5YU–1110N–10	B – 4
5YU–11112–00	B – 2
5YU–11131–10	B – 2
4WM–11133–10	B – 2
5YU–11141–10	B – 2
5YU–11166–00	B – 15
5YU–11167–00	B – 15
5YU–1116J–00	B – 15
5YU–11171–00	B – 2
4WM–11172–00	B – 2
4WM–11176–00	B – 3
5PX–11181–01	B – 2
5PX–11182–00	B – 2
5YU–11186–10	B – 4
5PX–11193–00	B – 4
214–11198–01	C – 7
	D – 14
5YU–1130E–00	C – 3
5YU–11311–10	B – 4
4WM–11351–00	B – 4
5YU–11400–01	B – 5
4WM–11534–00	B – 8
5YU–115A0–00	B – 8
5YU–11610–00	B – 5
5PX–11631–00	B – 5
4WM–11633–00	B – 5
5YU–11650–00	B – 5
5YU–11654–00	B – 5
5YU–11656–00	B – 5
5YU–11656–10	B – 5
5YU–11656–20	B – 5
5YU–11656–30	B – 5
5YU–11656–40	B – 5
4WM–11951–00	B – 8
5YU–12111–00	B – 6
4WM–12113–00	B – 6
4WM–12114–00	B – 6
26H–12116–00	B – 6
26H–12117–00	B – 6
4G0–12118–00	B – 6
4KM–12119–00	B – 6
5YU–12121–00	B – 6
5PX–12144–00	B – 7
1D7–12146–00	B – 6
5PX–12147–00	B – 8

PART NO.	GRID NO.
5PX–12148–00	B – 8
5PX–12151–00	B – 6
4WM–12153–10	B – 7
5PX–12154–00	B – 7
5YU–12155–00	B – 8
31G–12158–00	B – 6
31G–12159–02	B – 6
5PX–12161–00	B – 6
5PX–12215–00	B – 8
5YU–12275–10	C – 7
5YU–12278–10	C – 7
4WM–12282–00	B – 8
5PX–12286–00	C – 7
4WM–12293–00	B – 8
4WM–12294–00	B – 8
4WM–12298–00	B – 8
5YU–12405–00	D – 10
5Y9–12491–00	F – 7
5YU–12666–00	B – 14
5YU–13159–00	D – 15
5YU–13161–00	B – 11
4WM–13171–00	B – 10
4WM–13181–00	B – 11
5YU–13300–00	B – 10
5YU–13360–00	B – 10
5YU–13405–00	B – 10
4WM–13411–00	B – 10
5YU–13412–00	B – 10
5YU–13416–00	D – 15
5YU–13418–00	D – 15
5YU–13421–00	D – 14
3FV–13440–10	B – 11
5YU–1344A–10	B – 11
5YU–13464–00	D – 14
5YU–13465–00	D – 14
5YU–13475–01	D – 14
5YU–13545–00	B – 13
5YU–13546–00	B – 13
4BH–13573–00	B – 12
5YU–1357J–00	B – 14
4WM–1357N–01	B – 10
5PX–13586–00	B – 12
5YU–13590–00	B – 12
5YU–13595–00	B – 12
5YU–13750–01	B – 12
5YU–13761–00	B – 12
5YU–13892–00	B – 12
5YU–13895–00	B – 12

PART NO.	GRID NO.
5YU–13897–00	B – 14
5YU–13906–00	B – 12
5YU–13907–03	E – 10
5YU–13938–00	B – 12
5YU–13971–00	E – 10
5YU–13972–00	B – 13
5YU–13973–00	E – 10
5JW–14104–00	B – 12
5PS–1410H–00	B – 14
5FL–14147–00	B – 12
5PX–14188–00	B – 12
5PX–14189–00	B – 12
5PX–14239–00	B – 12
5YU–14295–00	E – 11
5YU–14411–00	B – 14
5YU–14414–00	B – 15
31A–14419–00	B – 14
5YU–14419–00	B – 14
5YU–1441A–00	B – 14
5YU–1441E–00	B – 14
5YU–14423–00	B – 14
5YU–14432–00	B – 14
5YU–14433–00	B – 15
31A–14435–00	B – 14
5YU–14451–00	B – 14
5YU–14452–00	B – 14
5YU–14453–00	B – 14
5YU–14457–00	B – 14
5PS–1446E–00	B – 14
5YU–1446F–00	B – 14
5YU–14545–00	B – 14
5PS–14552–00	B – 14
5YU–14610–20	C – 2
3EG–14613–00	C – 2
5YU–14615–00	C – 2
5YU–14620–00	C – 2
5YU–14628–00	C – 2
5YU–1465H–00	C – 2
5YU–14710–20	C – 3
5YU–14714–10	C – 2
5YU–14718–00	C – 2
5YU–14720–20	C – 3
5YU–14728–00	C – 2
5YU–14738–00	C – 2
5YU–1473B–00	C – 3
5YU–14740–20	C – 2
5YU–14747–00	C – 4
5PX–14755–00	C – 2

PART NO.	GRID NO.
5YU–14755–00	C – 2
5YU–14755–10	C – 3
5YU–14757–00	C – 3
5YU–14766–00	C – 4
5YU–14787–02	D – 12
5YU–14798–20	C – 3
5YU–14799–20	C – 3
5YU–1479H–00	C – 2
5JW–1479J–00	E – 10
5YU–1479J–00	C – 4
5YU–14826–00	C – 4
5YU–15100–20	C – 5
5YU–15113–00	C – 7
4WM–15123–00	C – 5
4WM–15138–00	C – 5
4WM–15142–00	C – 6
4WM–15143–00	C – 6
5YU–15189–10	C – 6
5YU–15199–10	C – 7
5YU–15362–10	D – 14
5YU–15371–00	B – 15
4WM–15377–00	C – 6
5YU–15381–00	C – 13
5YU–15383–00	C – 14
5YU–15411–10	C – 6
5YU–15413–10	C – 7
5YU–15417–00	C – 5
5YU–15418–20	C – 8
5YU–1541A–10	C – 8
5YU–1541E–00	C – 8
5YU–15421–10	C – 6
5YU–15425–00	C – 6
5PX–15431–00	C – 6
5YU–15451–01	C – 6
5PX–15461–02	C – 6
5YU–15462–01	C – 7
5YU–15471–10	C – 8
5YU–15472–10	C – 8
5YU–15484–00	C – 6
5YU–15494–00	C – 6
5YU–15495–00	C – 6
5YU–15496–00	C – 7
5YU–1549D–00	C – 8
5PX–15511–00	C – 9
4WM–15512–00	C – 9
4WM–15515–00	C – 9
4WM–15517–00	C – 9
4WM–15521–00	C – 9

PART NO.	GRID NO.
4WM–15522–00	C – 9
4WM–15590–00	C – 9
4WM–15653–00	C – 9
5VN–15659–00	C – 9
5YU–16111–00	C – 11
5YU–16150–00	C – 11
5YU–16154–00	C – 11
5YU–16164–00	C – 11
4WM–16181–00	C – 11
4WM–16193–00	C – 11
5YU–16321–00	C – 11
2H7–16325–00	C – 11
4XV–16331–00	C – 11
5YU–16334–00	C – 11
36Y–16335–00	C – 11
132–16346–00	D – 2
5YU–16350–00	C – 11
1TX–16352–00	C – 11
4KG–16356–00	C – 11
5YU–16357–00	C – 12
5YU–16370–00	C – 11
5YU–16381–10	C – 12
36Y–16383–00	C – 11
36Y–16384–00	C – 11
2H7–16385–00	C – 11
5YU–17121–01	C – 13
5YU–17141–00	C – 13
5YU–17151–00	C – 13
5YU–17211–00	C – 13
5YU–17221–00	C – 13
5YU–17231–00	C – 13
5YU–17241–00	C – 13
5YU–17251–00	C – 13
5YU–17411–00	C – 13
5YU–17421–00	C – 13
3CV–17460–00	C – 14
5YU–17466–00	C – 7
5YU–17471–00	C – 7
5YU–17613–10	C – 7
4WM–18101–01	D – 2
5YU–18110–00	D – 2
5YU–18112–00	D – 2
5EB–18113–00	D – 2
5YU–18115–00	D – 2
5LV–18116–00	D – 2
26H–18140–02	D – 2
4NK–18141–00	C – 15
4XV–18154–00	D – 2

PART NO.	GRID NO.
4NK–18185–00	C – 15
4WM–18511–00	C – 15
4WM–18512–00	C – 15
5PX–18513–00	C – 15
4NK–18531–00	C – 15
5PX–18540–00	C – 15
4UN–18542–00	C – 15
4UN–18566–00	C – 15
5YU–21110–40	D – 3
5YU–21116–00	D – 8
5YU–21151–00	D – 7
5YU–21152–00	D – 7
5YU–2115K–00	E – 13
5YU–21161–00	D – 3
5YU–21162–00	D – 6
5YU–21163–00	D – 3
5YU–2116A–00	D – 6
5YU–2116E–00	D – 6
5YU–2117A–00	D – 8
5YU–2117F–00	D – 6
5YU–2117K–00	E – 13
5YU–2117M–00	D – 6
5YU–2117X–00	D – 8
5YU–2117Y–00	D – 8
5YU–21183–01	D – 6
5YU–21190–00	D – 6
5YU–21191–00	D – 3
5YU–21196–00	D – 6
5PX–21268–00	D – 6
5VY–21268–00	D – 6
5YU–21281–00	D – 3
5VX–21289–00	D – 6
5YU–21314–00	D – 3
5YU–21315–00	D – 3
5YU–21316–00	D – 3
5YU–21317–00	D – 4
5YU–21319–00	D – 4
5YU–21321–00	D – 4
5YU–21322–00	D – 5
5YU–21359–00	D – 4
5YU–2137F–00	D – 3
5YU–2138K–00	B – 13
5YU–2138L–00	B – 13
5YU–21399–00	D – 3
5YU–2139X–00	D – 7
5YU–2143A–00	D – 4
	D – 7
5YU–2144G–00	F – 10

NUMERICAL INDEX

PART NO.	GRID NO.
5YU–21495–00	D – 3
5YU–21511–00–P3	D – 9
5YU–21511–00–P4	D – 9
5YU–21511–00–P5	D – 9
5PA–21568–00	E – 12
5YU–21600–00–98	D – 9
5YU–21629–00	D – 9
5YU–2162A–00	G – 8
5YU–2162G–00	D – 8
3BN–21639–00	D – 6
5A8–21639–00	D – 6
5YU–21639–00	F – 12
5YU–21649–00	D – 10
	D – 11
5YU–2164F–00	F – 12
5YU–2164G–00	F – 12
5YU–21650–10	E – 3
5YU–21655–00	G – 5
5YU–21656–00	G – 5
5VY–21668–00	D – 8
5YU–21669–00	D – 8
	D – 11
5YU–21717–00	D – 11
5YU–21718–00	D – 12
5YU–2171A–00–P3	E – 12
5YU–2171A–00–P4	E – 12
5YU–2171E–00	D – 13
5YU–2171L–00	D – 12
5YU–2171M–00	D – 13
5YU–2171X–00	D – 13
5YU–2172A–00	D – 10
5YU–2172F–00	D – 10
5YU–2172P–00	D – 10
5YU–2172R–00	D – 10
5YU–21731–00	D – 12
5YU–2173B–00	D – 11
5YU–2173P–00	D – 9
5YU–21741–00	D – 13
5YU–2174P–00	D – 10
5YU–21750–10	D – 14
5YU–2175P–00	D – 9
5YU–2175T–00	D – 14
5YU–2176V–00	E – 13
5YU–21778–00	E – 12
5YU–2177M–00	D – 10
5YU–2177N–00	D – 10
5YU–22110–20	E – 3
5YU–22141–00	E – 4

PART NO.	GRID NO.
5YU–22143–00	E – 4
5YU–22151–00	E – 3
5YU–2217A–10	E – 4
5YU–2217M–01	E – 4
5YU–2219X–00	E – 3
5YU–22210–01	E – 4
5YU–22311–00	E – 3
5YU–22332–00	E – 3
5YU–22361–00	F – 9
5YU–22362–00	F – 11
5YU–23102–10	E – 8
5YU–23103–10	E – 8
5YU–23106–00	E – 8
5YU–23110–10	E – 8
5YU–23111–00	E – 8
4TX–23115–00	E – 8
5YU–23118–00	E – 8
5YU–23120–10	E – 8
4KM–23123–01	E – 6
5YU–23123–10–P0	D – 9
5YU–23123–10–P1	D – 9
5YU–23133–10–P0	D – 9
5YU–23133–10–P1	D – 9
5YU–23141–00	E – 8
5YU–23142–00	E – 8
5YU–23143–00	E – 8
4TX–23144–00	E – 8
5VX–23145–00	E – 8
4TX–23156–00	E – 8
5YU–2315H–00	E – 10
5YU–23170–00	E – 8
5YU–23175–00	E – 7
5YU–2332N–00	E – 8
5YU–23340–00	E – 9
5YU–23393–00	E – 8
5YU–23405–00	E – 6
5VX–23415–00	E – 6
26H–23418–01	E – 6
5YU–23441–00	E – 6
5YU–23442–00	E – 6
5YU–23445–00	E – 6
5YU–2344A–00	E – 6
5YU–2344E–00	E – 6
3FV–23462–00	E – 9
2H9–23469–00	F – 6
	F – 7
5EL–23469–00	F – 5
5YU–2376R–00	E – 11

PART NO.	GRID NO.
5YU–23844–00	E – 9
5YU–23857–00	F – 6
5YU–2411B–00	E – 12
5YU–24129–00	D – 7
5YU–24139–00	D – 8
5YU–24141–00	E – 10
5YU–2414H–00	E – 10
5YU–2414N–00	E – 10
5YU–2414P–00	E – 10
3ME–2415E–01	E – 12
5YU–24161–00	E – 10
3UH–24180–00	E – 11
5RB–24180–00	E – 11
4FM–24181–00	C – 3
5YU–24181–00	D – 7
5YU–24182–00	D – 7
5YU–24183–00	D – 7
5YU–24184–00	D – 7
3VD–24188–00	D – 6
1HX–24188–01	D – 7
5YU–24192–00	E – 10
5YU–24193–00	E – 10
5YU–24311–00	E – 11
5YU–24312–00	E – 11
5YU–24313–00	E – 11
5YU–24314–00	E – 11
5YU–24315–00	E – 11
5YU–24316–00	E – 11
5YU–24317–00	E – 11
4KM–24453–00	B – 12
5JW–24486–00	E – 10
5SL–24491–00	E – 10
5YU–24595–00	E – 11
5PX–24602–01	E – 10
5YU–2470F–00	E – 13
5YU–2470F–10	E – 13
5YU–24720–00	E – 13
5SL–24723–00	E – 13
5YU–24723–00	E – 11
509–24724–00	E – 13
5YU–24724–00	E – 11
5YU–24730–00	E – 13
5YU–24730–10	E – 13
5PS–24741–00	E – 13
5YU–2474F–00	E – 13
5YU–24758–00	E – 13
5YU–2476U–00	E – 11
5YU–2476V–00	E – 11

PART NO.	GRID NO.
5YU–24775–00	E – 13
5YU–24776–00	E – 13
5YU–2478E–00	E – 13
5YU–2482H–00	E – 13
5YU–2482H–10	E – 13
4XV–25117–00	E – 14
4XV–25118–00	E – 14
5YU–25168–00–1X	E – 14
5YU–25168–00–98	E – 14
5YU–25168–00–P1	E – 14
4XV–25181–10	E – 14
4XV–25186–00	E – 14
5PW–25317–00	F – 2
5YU–25338–00–1X	F – 2
5YU–25338–00–98	F – 2
5YU–25338–00–P1	F – 2
5YU–25364–00	F – 2
5PW–25366–00	F – 2
5SL–25367–00	F – 2
5SL–25376–00	F – 2
5YU–25377–00	F – 2
5SL–25381–10	F – 3
4XV–25383–00	F – 2
5YU–25388–00	F – 3
5YU–25389–00	F – 3
5MT–25398–00	E – 14
	F – 2
5MT–25398–10	E – 14
	F – 2
5MT–25398–20	E – 14
	F – 2
5YU–25439–00	F – 2
4C8–2580T–00	E – 15
4C8–2580U–00	E – 15
5YU–2580V–00	F – 4
5YU–2581J–00	F – 12
5YU–2581K–00	F – 12
5YU–2581T–10	E – 15
5YU–25827–00	F – 4
5YU–25827–10	F – 4
5YU–25828–00	F – 4
5YU–2582A–00	F – 12
5YU–2582V–00	F – 4
5SL–25838–00	F – 4
5VY–2583B–00	E – 15
5YU–2583V–00	F – 12
5YU–25852–00	F – 12
5YU–25852–10	F – 6

PART NO.	GRID NO.
5YU–25852–50	F – 7
55U–25854–00	F – 12
5YU–25854–10	F – 6
5YU–25854–50	F – 7
5YU–25855–10	F – 6
5YU–25855–50	F – 7
3GM–2585B–20	F – 12
4BP–2585F–00	F – 12
5VS–2585H–00	F – 6
5YU–25867–10	F – 6
5VS–2586F–00	F – 6
5YU–25872–10	F – 6
5YU–25875–00	D – 9
5YU–25876–00	D – 9
5YU–25886–00	F – 12
5YU–25887–00	F – 13
5YU–2588F–00	F – 13
5YU–2588G–00	F – 13
5YU–25894–00	F – 12
5YU–25895–00	F – 12
3FV–2589F–00	F – 7
5VY–2589F–01	F – 6
5VS–2589H–00	F – 6
5YU–25914–00	F – 4
5DH–25916–00	F – 4
3JD–25917–00	F – 4
5SL–25917–00	F – 4
4C8–25919–00	E – 15
5YU–25919–00	F – 4
4C8–25919–10	E – 15
5YU–25921–00	F – 4
4SV–25924–00	E – 15
5YU–25924–00	F – 4
3GM–25925–00	E – 15
5SL–25926–00	F – 4
5YU–26111–10	F – 5
5PS–26133–10	F – 5
4YR–26240–02	F – 5
4YR–26241–02	F – 5
5YU–26246–00	F – 5
5YU–26259–00	F – 6
5YU–26280–20	F – 5
5YU–26290–20	F – 5
5YU–26311–01	F – 5
5YU–26312–00	F – 5
5VS–26332–00	F – 6
5YU–26332–00	F – 7
5YU–26393–10	F – 7

PART NO.	GRID NO.
3GM–26455–00	F – 7
5YU–26464–00	F – 7
5YU–26470–00	F – 7
5YU–26475–00	F – 7
5YU–26477–00	F – 7
5YU–27200–00	F – 10
5SL–27222–00	F – 12
5YU–27264–00	F – 10
5YU–27268–00	F – 10
5YU–27275–00	F – 10
5YU–27311–00	F – 8
5YU–27315–00	F – 8
5YU–27321–00	F – 8
4NX–27351–00	F – 8
5PW–27352–00	F – 8
5YU–27401–00	F – 11
5YU–27410–00	F – 8
4BP–27413–00	F – 8
	F – 10
5YU–27413–20	F – 9
1HX–27415–00	F – 9
	F – 10
5YU–2741L–00	F – 9
5YU–27420–00	F – 10
1NL–27424–00	F – 8
	F – 10
5YU–2742L–00	F – 11
5YU–27431–00	F – 9
5YU–27437–00	F – 9
	F – 11
5YU–27441–00	F – 11
5YU–27442–20	F – 8
5YU–27443–20	F – 10
5YU–27445–00	F – 10
5YU–27446–00	F – 9
5YU–27446–10	F – 9
5YU–27486–00	F – 10
5YU–27487–00	F – 9
5YU–274A3–20	F – 8
5YU–274A4–20	F – 10
5YU–27854–00	F – 10
5YU–28100–00	D – 5
5YU–2811F–00	D – 11
5YU–28217–00	D – 12
5YU–28227–00	D – 11
5YU–28237–00	D – 12
5YU–28247–00	D – 11
5YU–28307–00	G – 3

NUMERICAL INDEX

PART NO.	GRID NO.
5YU–2831F–00	G – 3
5YU–2831V–20	G – 3
5YU–28321–00	D – 15
5YU–28322–00	E – 2
5YU–2832V–20	G – 3
5YU–28345–00	D – 6
5YU–2834E–00	D – 13
5YU–2834F–00	D – 13
5YU–2834L–00	E – 6
5YU–2834V–00	G – 3
5YU–2834W–00	G – 3
5YU–2835U–00	D – 7
5YU–2835U–10	D – 7
5YU–28366–00	G – 3
5YU–28367–00	G – 3
5YU–2836A–00	D – 14
5YU–2836E–00	E – 2
5YU–2836K–00	D – 7
5YU–2836K–20	D – 7
5YU–2836L–00	D – 7
5YU–2836L–20	D – 7
5YU–2836T–00	D – 11
5YU–2836U–00	D – 12
5YU–28371–00	D – 12
5YU–28372–00	D – 11
5YU–28373–00	D – 7
5YU–2837J–00	D – 13
5YU–2837K–00	D – 13
5YU–28415–00	D – 10
5YU–28416–00	D – 10
5YU–28428–00	E – 7
5YU–28435–00	D – 12
5YU–28455–00	D – 11
5YU–2847R–00	D – 11
5YU–2847S–00	D – 11
5YU–2848H–00	D – 9
5YU–2848K–00	D – 10
5YU–2848P–00	D – 10
5YU–2848R–00	D – 10
8CR–77319–00	E – 10
5YU–81410–00	F – 14
5PX–81450–01	F – 14
5YU–81670–00	F – 14
5YU–81673–00	C – 12
1D7–81801–00	C – 9
5PX–8181L–00	C – 9
5PX–8182G–00	C – 9
1D7–81835–00	C – 9

PART NO.	GRID NO.
5YU–8183G–00	C – 9
5PX–81846–00	C – 9
5PX–81861–00	C – 9
5PX–81890–01	C – 9
1D0–81940–02	G – 9
5EA–81950–20	G – 9
5KS–81950–30	G – 9
5EA–81952–00	G – 9
5YU–81960–00	G – 7
5EA–82100–11	G – 8
5SL–82113–00	G – 8
5YU–82116–00	G – 8
5YU–82121–00	D – 11
5YU–82122–00	D – 11
5YU–82123–00	D – 11
5YU–8212B–00	D – 11
5YU–8212C–00	D – 11
5YU–82131–00	G – 8
5YU–82137–00	G – 8
36Y–82151–00	G – 9
5JJ–82151–10	G – 8
5JW–82151–10	G – 8
5JJ–82151–30	G – 8
5JJ–82151–70	G – 8
5YU–82176–00	D – 11
5YU–82301–00	G – 7
5YU–82302–00	G – 7
5YU–82303–01	G – 7
5YU–82310–00	G – 7
4NK–82370–00	G – 7
5PS–82380–00	B – 13
5YU–82509–00	G – 7
5YU–82509–10	B – 12
5YU–82509–20	G – 7
5YU–82509–30	G – 3
5SL–82511–08	G – 8
5YU–82530–00	G – 7
1AE–82540–00	G – 7
5YU–82545–00	E – 12
5YU–82559–00	D – 11
5YU–8255P–00	G – 8
5YU–82566–01	F – 8
5YU–82568–00	G – 8
5PS–82576–01	G – 9
5UX–82589–00	G – 9
5YU–82589–10	G – 8
5YU–82590–10	G – 8
1UA–82591–00	C – 3

PART NO.	GRID NO.
1UA–82591–00	D – 11
	G – 5
	G – 9
5YU–82591–00	G – 3
5YU–83310–00	F – 15
1KH–83311–00	F – 15
5PW–83318–00	F – 15
5PW–83320–01	F – 15
5YU–83330–00	F – 15
5PW–8333A–00	F – 15
5YU–83340–00	F – 15
5PW–8334A–00	F – 15
5YU–83350–00	G – 9
5YU–83371–00	G – 7
5YU–83500–21	G – 2
5YU–83500–31	G – 2
5YU–83500–40	G – 2
5YU–83500–50	G – 2
5YU–83506–00	G – 2
5YU–83506–40	G – 2
5PS–83513–00	G – 2
	G – 3
5UX–8352K–00	G – 2
5YU–8353E–20	G – 2
5YU–83559–00	G – 2
5YU–83559–40	G – 2
5YU–83570–02	G – 2
5YU–83570–12	G – 2
5YU–83572–00	G – 2
5EL–8357E–00	G – 2
5YU–8358J–00	G – 2
5YU–8358J–10	G – 2
5PX–83591–00	B – 2
5YU–83616–00	G – 2
5YU–83755–01	G – 7
5YU–83912–10	F – 7
5YU–83922–10	F – 6
5YU–83969–01	G – 6
5YU–83975–01	G – 6
3GM–83980–00	F – 7
4HM–83980–00	F – 6
5YU–84300–01	G – 3
5YU–84300–30	G – 3
5PS–84314–00	G – 3
5YU–84314–00	G – 3
5YU–8431R–00	G – 3
5DM–84347–00	G – 3
	G – 5

PART NO.	GRID NO.
5YU–84359–00	G – 3
5YU–84397–00	G – 3
5YU–8454J–00	D – 9
5YU–84710–00	G – 5
5YU–84740–00	G – 5
5YU–84747–00	G – 5
3Y6–85130–02	G – 5
5YU–85790–00	D – 10
5YU–85820–00	G – 8
5VY–85829–00	G – 8
5YU–85880–00	B – 13
5PX–85885–01	B – 12
5YU–85886–00	G – 3
5YU–8591A–10	G – 8
5YU–8592A–20	C – 2
5YU–86110–00	G – 7
5VY–W0041–00	F – 6
5VS–W0042–50	F – 12
4C8–W0045–00	E – 15
5YU–W0046–00	F – 4
3JD–W0047–00	F – 4
4C8–W0047–00	E – 15
1J3–W0048–00	E – 15
1UY–W0048–00	F – 4
3LD–W0057–00	F – 4
4C8–W0057–00	E – 15
5YU–W0099–00	F – 7
5YU–W1211–00	B – 8
5YU–W1441–00	B – 14
5VY–W2470–00	E – 13
5YU–W2587–10	F – 6
5YU–W2645–10	F – 7
5YU–W8250–10	G – 8
5YU–Y2171–00–98	D – 11
5YU–Y2172–00–98	D – 12
5YU–Y2410–30–01	E – 10
5YU–Y2410–30–02	E – 10
5YU–Y2808–00–P0	D – 15
5YU–YK241–30–P3	E – 10
90101–08013	E – 3
90101–08662	F – 8
90101–12011	C – 11
90101–12016	E – 5
90105–06009	G – 7
90105–06020	C – 13
90105–06050	F – 10
90105–060A0	F – 6
90105–06556	E – 3

PART NO.	GRID NO.
90105–06557	B – 15
90105–06639	D – 6
90105–08093	C – 3
90105–08095	F – 9
90105–10018	E – 4
90105–10024	D – 3
90105–10120	D – 3
90105–10290	B – 8
90105–12005	C – 9
90105–12014	D – 4
90105–12016	D – 3
90105–12026	D – 4
90105–12034	E – 4
90105–12035	D – 7
90109–05007	D – 13
	E – 13
90109–06048	D – 2
90109–06061	D – 12
90109–06078	G – 4
90109–06085	D – 9
90109–061F7	B – 2
90109–063F1	D – 11
90109–064G6	F – 4
90109–08049	D – 2
90109–080G5	D – 8
90109–083E0	F – 8
	F – 10
90109–10014	D – 4
90109–103A9	F – 9
	F – 10
90110–04001	B – 9
90110–05013	B – 8
90110–05014	E – 10
90110–05112	E – 10
90110–05201	D – 7
90110–05215	D – 12
90110–06004	C – 7
90110–06007	D – 6
90110–06022	B – 8
90110–06044	C – 5
90110–06047	B – 11
90110–06057	B – 10
90110–06061	G – 7
90110–06086	B – 4
90110–06106	B – 11
90110–06151	B – 4
90110–06152	C – 8
90110–06154	B – 4

PART NO.	GRID NO.
90110–06155	B – 2
90110–06200	D – 9
90110–08015	C – 9
90110–08033	B – 2
90110–08046	C – 7
90110–08049	F – 11
90110–08220	F – 8
	F – 10
90111–05013	C – 8
90111–05014	D – 10
90111–05015	F – 9
	F – 10
90111–05026	D – 15
90111–06003	D – 3
90111–06019	D – 2
	D – 10
90111–06030	D – 9
90111–06031	C – 2
90111–06038	D – 13
90111–06040	E – 3
90111–06043	D – 9
90111–06060	C – 2
90111–06062	D – 4
	F – 13
90111–06065	F – 6
90111–06074	D – 9
90111–08022	F – 12
90116–10344	C – 7
90116–10485	F – 2
90116–12010	C – 7
90119–06062	E – 10
90119–06115	C – 2
90149–05011	C – 15
90149–05299	D – 15
90149–06004	C – 6
90149–06019	F – 14
90149–06022	E – 4
90149–06040	G – 7
90149–06043	E – 15
90149–06057	C – 6
	F – 14
90149–06113	D – 7
90149–06233	D – 6
90149–06270	F – 9
	F – 11
90149–06298	E – 3
90149–06302	D – 11
90149–08230	G – 8

PART NO.	GRID NO.
90149–10006	D – 7
90149–10024	D – 3
90151–06008	C – 14
90151–06013	C – 15
90157–05079	F – 8
	F – 10
90159–05083	G – 5
90164–04023	G – 2
90164–05014	G – 2
90167–05010	G – 5
90170–06228	D – 2
90170–08010	F – 12
90176–06041	D – 14
90176–08080	C – 3
90176–12052	E – 6
90179–05003	D – 6
90179–05434	D – 8
90179–05523	D – 15
	E – 12
90179–05525	D – 15
90179–10015	D – 3
90179–14469	B – 8
90179–20007	C – 11
90179–22006	C – 14
90179–22009	E – 6
90179–25033	E – 6
90183–04039	D – 11
	G – 5
90183–05061	G – 5
90183–05076	D – 12
90183–06053	D – 9
90185–08097	C – 2
90185–10002	D – 3
90185–10009	F – 2
90185–12002	D – 3
90185–24007	F – 3
90201–042E0	G – 9
90201–05015	C – 2
90201–05018	G – 5
90201–06050	D – 8
90201–06055	D – 7
90201–06380	D – 11
90201–06431	F – 9
90201–064K6	C – 2
90201–08034	C – 4
90201–08052	E – 6
90201–08085	D – 2
	F – 8

PART NO.	GRID NO.
90201–08085	F – 10
90201–08086	B – 9
90201–081R9	F – 8
90201–083A8	C – 3
90201–083P5	F – 9
	F – 11
90201–10021	F – 2
90201–100L3	B – 8
90201–10118	F – 7
90201–101J1	F – 8
90201–12008	C – 9
90201–12018	E – 6
90201–12026	D – 7
90201–120A5	D – 4
90201–12172	B – 2
90201–121U3	E – 4
90201–12790	B – 2
90201–140H8	B – 8
90201–14220	E – 6
90201–146F9	F – 8
90201–18017	B – 2
90201–220T0	E – 6
90201–23014	C – 13
90201–232K5	C – 13
90201–25017	C – 14
90201–25018	F – 3
90202–05088	E – 12
90202–05180	D – 12
90202–05224	D – 15
90202–06002	G – 7
90202–08001	E – 13
90202–08M43	E – 13
90202–24190	E – 6
90202–26142	E – 6
90208–20001	C – 11
90208–22002	C – 14
90209–06250	B – 15
90209–08249	C – 3
90209–08295	F – 8
	F – 10
90209–25014	C – 13
90209–28008	C – 13
90209–33008	C – 13
90214–13002	F – 9
	F – 10
90267–40102	B – 14
90267–48017	C – 3
90269–05073	D – 13

PART NO.	GRID NO.
90269–06003	D – 6
90269–06012	D – 13
90269–06081	D – 10
90269–07012	D – 10
90269–07064	D – 11
90269–07076	D – 10
90269–08001	E – 4
90280–05048	C – 9
90282–03012	B – 8
90282–03039	B – 8
90338–08163	E – 6
90338–08220	D – 15
90338–10132	D – 15
90340–12112	B – 2
90340–14132	C – 7
	D – 14
90387–0600V	E – 4
90387–06014	F – 9
	F – 11
90387–06066	E – 3
90387–06071	D – 7
90387–06097	E – 10
90387–06100	D – 14
90387–062R8	D – 12
90387–062T5	B – 3
90387–065J6	D – 9
90387–065T2	D – 7
	D – 9
90387–06648	D – 9
90387–067V1	B – 15
90387–06M60	G – 8
90387–07391	B – 15
90387–07717	D – 10
90387–08039	C – 4
90387–082W9	C – 3
90387–087A5	B – 4
90387–10040	E – 3
90387–10041	E – 3
90387–12025	E – 4
90387–12026	E – 4
90387–12027	E – 5
90387–124V0	E – 4
90387–22008	E – 4
90387–22009	E – 3
90387–22010	E – 3
90387–22011	E – 3
90387–224L9	F – 7
90387–23003	C – 13

PART NO.	GRID NO.
90387–25013	C – 14
90387–26006	C – 11
90387–28010	C – 13
90387–30007	C – 14
90387–31003	C – 13
90387–350R5	C – 13
90401–08001	B – 10
90401–10012	E – 15
90401–10172	F – 6
	F – 7
	F – 12
90401–10175	B – 10
90413–07007	E – 11
90430–05126	C – 5
90430–06014	C – 6
90430–08119	B – 10
90430–09002	B – 12
90430–10005	F – 6
	F – 12
90430–10188	B – 10
90430–12219	B – 12
90445–11748	D – 14
90445–13M03	E – 11
90445–19002	F – 8
90450–52004	B – 14
90450–57092	B – 12
90461–10012	C – 8
90461–15139	E – 11
90462–08033	C – 7
90462–10028	C – 8
90462–10029	C – 5
90464–07010	D – 6
90464–07011	G – 7
90464–08189	D – 6
90464–09020	E – 11
90464–10005	E – 11
90464–10112	B – 13
90464–10233	G – 7
90464–12036	B – 13
90464–12M58	D – 5
	D – 6
90464–13073	G – 7
	G – 9
90464–13077	D – 3
90464–13227	F – 8
90464–15192	D – 4
	G – 3
90464–15195	D – 3

PART NO.	GRID NO.
90464–15200	G – 3
90464–18002	D – 6
	F – 12
90464–18116	G – 8
90464–20009	D – 3
90464–25217	D – 3
90464–35132	G – 8
90464–48174	G – 7
90465–08127	G – 7
90465–08382	D – 4
90465–10098	B – 12
90467–07093	B – 12
90467–08003	B – 15
90467–08092	B – 15
90467–09006	E – 11
90467–10008	D – 14
90467–10135	B – 13
90467–11044	E – 11
90467–11136	B – 13
90467–12003	E – 11
90467–12191	F – 12
90467–15001	B – 13
	B – 14
90480–01558	D – 13
	E – 10
90480–01559	D – 9
90480–12003	E – 4
90480–12072	D – 15
90480–12314	D – 9
90480–12320	D – 13
90480–12480	E – 3
90480–12497	B – 15
90480–12596	D – 12
90480–14010	D – 14
90480–14023	B – 15
90480–14604	G – 8
90480–16003	E – 10
90480–17001	C – 2
90501–06022	C – 15
90501–15001	F – 9
	F – 11
90506–08227	D – 2
90506–18007	D – 2
90506–18008	F – 8
90506–20014	F – 11
90560–30234	C – 15
91314–06010	D – 15
91314–06012	C – 8

PART NO.	GRID NO.
91314–06014	G – 7
91314–06016	B – 4
	C – 5
	D – 15
	F – 9
91314–06020	B – 12
	D – 2
	D – 14
91314–06025	C – 7
	C – 10
91314–06030	C – 6
	C – 12
	D – 14
91314–06035	C – 6
91314–06040	C – 5
	F – 9
	F – 11
91314–06045	C – 8
91314–06050	B – 4
	C – 6
91314–06060	B – 4
	C – 5
91314–06065	C – 6
	C – 12
91314–06070	C – 6
91314–06075	C – 5
91314–06085	C – 5
91314–06105	C – 5
91314–08030	C – 3
	E – 6
91314–08035	E – 9
91314–08040	F – 9
	F – 11
91314–08080	C – 5
91314–08100	C – 5
91317–04025	G – 9
91317–05010	E – 10
91317–05016	B – 13
91317–06010	D – 14
	F – 10
91317–06012	F – 8
91317–06014	C – 7
	E – 2
91317–06016	B – 10
	D – 14
91317–06020	B – 13
91317–06050	C – 8
91317–06080	B – 10

PART NO.	GRID NO.
91317–08050	C – 7
91380–06016	G – 7
91401–16012	F – 11
91701–06018	F – 11
91808–16023	B – 2
	B – 4
92014–05010	C – 5
92014–05016	E – 12
92014–06010	B – 2
92014–06012	C – 8
	E – 7
92014–08020	C – 2
92014–08035	C – 2
92017–05030	F – 8
92017–06010	D – 3
	F – 10
	F – 12
92017–06012	B – 15
	D – 4
92017–06016	D – 10
92017–06020	D – 8
92017–06025	B – 15
	D – 11
	E – 13
92907–05200	D – 8
92907–05600	B – 13
	G – 6
92907–06200	D – 14
	F – 11
93102–12224	C – 6
93102–30243	E – 3
93102–40022	C – 14
93104–08089	C – 7
93106–28043	E – 14
93106–40013	F – 2
93109–08061	C – 12
93109–17071	E – 3
93109–28001	E – 3
93109–28043	E – 3
93210–06001	C – 9
93210–06632	C – 11
93210–06667	B – 10
93210–07435	B – 11
93210–08003	B – 11
93210–09350	B – 10
93210–10001	C – 5
93210–13657	B – 11
93210–15171	D – 14

PART NO.	GRID NO.
93210–16325	C – 6
93210–19522	D – 15
93210–23326	B – 11
	D – 14
93210–25711	C – 9
93210–27370	D – 14
93210–27672	C – 14
93210–29196	G – 7
93210–32172	C – 6
93210–36769	C – 5
93210–40745	B – 8
93210–41N50	E – 8
93210–472A9	B – 8
93210–48364	B – 8
93210–54175	B – 8
93210–54452	B – 8
93210–63001	B – 4
93305–20607	C – 14
93306–00304	C – 11
93306–00420	E – 14
93306–20531	F – 2
93306–20550	C – 14
93306–30441	C – 13
93306–37806	C – 13
93306–90602	C – 15
93306–97201	E – 3
93310–33559	C – 11
93315–31750	E – 4
93315–31758	E – 3
93317–11287	C – 6
93317–33590	F – 2
93317–42894	E – 3
93317–52897	E – 3
93399–99931	E – 6
93399–99932	E – 9
93410–23056	C – 13
93410–25017	C – 14
93420–61M07	F – 2
93440–12052	B – 2
93440–28062	C – 13
93440–31187	C – 13
93440–34025	C – 13
93450–24028	B – 5
93501–04011	F – 9
	F – 11
93511–32017	C – 12
93603–10049	C – 15
93604–12037	C – 15

PART NO.	GRID NO.
93604–16092	C – 15
93606–10227	C – 7
93900–00030	E – 14
	F – 2
94582–16114	F – 3
94682–16031	F – 3
94701–00262	B – 3
94701–00379	B – 3
95024–08035	C – 3
95027–06008	G – 9
95027–06010	D – 4
	F – 7
	F – 10
	F – 12
95027–06012	D – 4
95027–06016	B – 13
	F – 12
	G – 7
95027–06020	G – 8
95027–06030	F – 13
95302–06700	C – 9
95302–08600	E – 3
95304–06700	D – 2
95604–06200	F – 9
	F – 11
95604–10200	D – 4
95604–12200	D – 3
95607–05200	F – 8
	G – 5
95607–06200	E – 13
95607–10200	D – 7
	E – 4
	F – 8
95607–12200	E – 4
95614–12100	D – 7
95617–08625	B – 2
95707–05500	B – 15
95707–06500	D – 9
	F – 7
	F – 12
95807–06012	E – 13
95814–10190	D – 4
95814–12110	D – 3
95817–06012	E – 7
95817–06025	C – 11
95817–08045	C – 3
	C – 9
95817–10035	D – 6

PART NO.	GRID NO.
95817–10055	D – 6
95817–10065	D – 4
95817–10080	D – 4
95824–08040	C – 3
95827–10030	D – 4
97007–05016	B – 13
97706–04012	F – 15
97707–30014	G – 2
97707–40012	D – 10
97707–50012	D – 10
	G – 3
97707–50014	G – 3
97707–50514	G – 8
97707–50516	B – 14
97707–50525	B – 14
98507–05012	G – 3
98507–05020	G – 6
98507–05030	G – 6
98507–05045	G – 6
98507–05055	G – 6
98507–06010	F – 10
98507–06050	B – 12
98706–04040	F – 12
98707–04012	F – 7
98707–04016	F – 7
98904–06012	C – 2
98907–05008	E – 10
98907–05012	B – 14
	E – 11
99009–10800	C – 9
99009–40500	E – 3
99530–08012	C – 12
99530–10114	C – 6
99530–14016	C – 5
99590–10014	C – 7
99590–10114	C – 8

PART NO.	GRID NO.

PART NO.	GRID NO.